NASA
National Aeronautics and
Space Administration

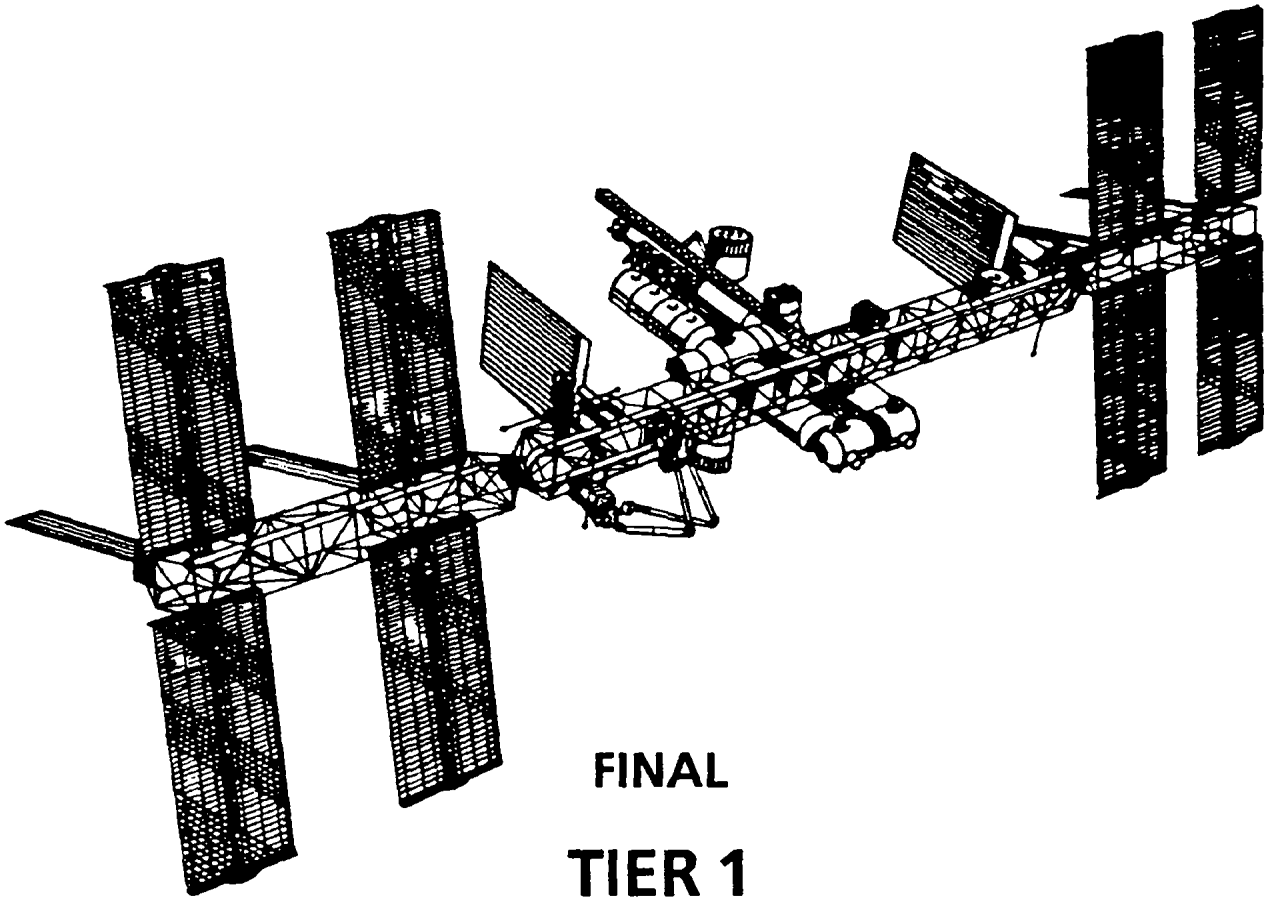

FINAL

TIER 1

ENVIRONMENTAL IMPACT STATEMENT

FOR

SPACE STATION FREEDOM

March 1991

FINAL
TIER 1
ENVIRONMENTAL IMPACT STATEMENT
FOR THE SPACE STATION FREEDOM PROGRAM

Responsible Federal Agency:

National Aeronautics and Space Administration Headquarters
Washington, D.C.

For Additional Information Contact:

Director, Policy and Plans Division
Office of Space Flight
National Aeronautics and Space Administration
Washington, D.C. 20546
(202) 453-8662

Date: March 1991

In January 1984, President Reagan committed the nation to the goal of developing a permanently manned Space Station within a decade. The United States, in cooperation with Canada, the European Space Agency (ESA), and Japan, has embarked on a program to design and place in orbit a research laboratory for scientific experiments, technology development, and stimulation of commercial space enterprises. The baseline Space Station Freedom (referred to as the Space Station or the Station) will consist of four major elements. The human-occupied base will fly in low Earth orbit from 278 km (150 n.m.) to 500 km (270 n.m.). An ESA Free Flying Laboratory will fly in approximately the same orbit. Two other platforms will fly in sun-synchronous polar orbits about 705 km (380 n.m.) above the Earth. Space Station Freedom will be assembled in orbit over a four year period beginning early in 1995 and ending in the third quarter of 1999. Space Station Freedom is being designed for a lifetime of not less than 30 years. The proposed action will enable the United States to continue leadership in space exploration and utilization and to provide a mechanism for international cooperation in space. This Tier 1 Environmental Impact Statement (EIS) was prepared based on the Space Station configuration, assembly sequence, and program milestones that existed prior to the Preliminary Design Review (PDR). It addresses the environmental impacts resulting from the proposed action (the baseline Space Station Freedom) and three alternative actions. They are: a different Space Station configuration, a Space Station which is not permanently manned, and termination of the Space Station Freedom program. The proposed action is not expected to cause significant environmental impacts as a result of normal operation. However, in the case of accidental inadvertent reentry of Space Station components, there exists a remote possibility of loss of life and/or property. Tier 2 of the EIS will reflect changes to the configuration, assembly sequence, and program milestones resulting from the PDR and subsequent program reviews or reassessments. It will address the environmental impacts of significant modifications made subsequent to the PDR, as well as the probability of accidental reentry, and the injury/damage probability associated with such reentry.

SUMMARY

In January 1984, President Reagan committed the nation to the goal of developing a permanently manned Space Station within a decade. The National Aeronautics and Space Administration (NASA) subsequently established a Space Station Program Office which developed a baseline configuration for the Space Station. On July 18, 1988, President Reagan christened the Space Station "Freedom." Formal international agreements among the dozen nations to participate in the Space Station Freedom Program (SSFP) were signed in Washington on September 29, 1988.

Proposed Action

The proposed action will consist of four major elements which are the manned base, a free flying laboratory, and two polar orbiting platforms. The human-occupied base will fly in low Earth orbit from 278 kilometers (150 n.m.) to 500 km (270 n.m.) altitude at 28.5 degree inclination. The normal operating altitude will be 463 km (250 n.m.). Flying at an orbital velocity of about 18,000 miles per hour, the manned base will circumnavigate the Earth approximately every 90 minutes.

The ESA Free Flying Laboratory for microgravity experiments will fly in approximately the same orbit as the manned base. The laboratory will be serviced periodically either at the manned base or by ESA's Hermes spacecraft. Two other platforms, supplied by the U.S. and ESA respectively, will fly in sun-synchronous polar orbits about 705 km (380 n.m.) above the Earth with an inclination of 98.2 degrees with the Equator.

Space Station Freedom is intended to serve multiple functions. Materials processing research will be conducted, and products not producible on Earth due to the adverse influences of gravity will be manufactured. These may include products which enhance precision measurements, pharmaceuticals, and flawless crystals for use in electronic, optical, and communications systems. The Station will also serve as a laboratory with a unique vantage point for advanced research in such fields as astrophysics, solar system exploration, Earth sciences, life sciences, and remote sensing. Space Station Freedom will be an operations base which will function continuously 24 hours a day, 365 days a year. It will serve as a base for vehicles delivering payloads to higher orbits and returning them as needed; and as a construction center for erecting systems too large to be launched directly from Earth. It can serve as a departure point for vehicles traveling to distant planets. It will also promote international cooperation in space through the U.S. agreements with Canada, Japan, and ESA, a consortium of nine European nations. An intangible benefit from the Space Station Freedom is the prestige associated with such a pioneering effort.

Other Alternatives

The alternatives to the proposed action are: (1) a different Space Station manned base configuration called the "Power Tower;" (2) a Space Station which is not permanently manned (the Man-Tended Approach (MTA)); and (3) termination of the Space Station Freedom Program (no action).

The Power Tower would be a different configuration of the manned base. It would fly in the same orbit as the manned base in the proposed action. There would also

be an unmanned U.S. Polar Orbiting Platform (POP), and a Co-Orbiting Platform (COP) also unmanned.

In the MTA, the base would be comprised of only one module rather than four. This would be a multi-purpose laboratory. It would not be permanently manned but would be visited periodically by the Shuttle. No other platforms are included in this alternative.

Under the no action alternative, NASA would cancel the Space Station Freedom Program and fail to meet the presidential, NASA, and scientific objectives for which Space Station Freedom is being designed. Instead, NASA would use the Shuttle and Expendable Launch Vehicles (ELVs) to meet the U.S. objectives to the extent possible.

The Power Tower and MTA alternatives do not meet the program's major objectives. They also would severely limit the kinds of research which could be conducted compared to those planned for the proposed action alternative. The Power Tower is being considered because, it is a viable configuration alternative. The MTA is considered in this EIS because in 1985, Congress requested that NASA assess it as an alternative. After NASA's assessment was completed, the agency informed Congress that the MTA was not a viable option because it could not meet the program's major objectives. It is included here, despite the assessment, in order to have a complete analysis, and because a Man-Tended Capability (MTC) has been adopted as an interim program milestone in the assembly sequence. The MTC milestone does not represent a completed Station, but rather, represents the point at which the Station will first become operational. The information on the MTA is derived from the 1986 report to Congress on this subject.

Environmental Impacts

The proposed action is not expected to cause significant environmental impacts in normal operation. A study will be performed following the Space Station Freedom Preliminary Design Review (PDR) to more precisely determine the probabilities associated with the possible reentry of the Space Station into the atmosphere. Mitigative measures are being taken in the design of the Station and its operation to minimize the likelihood of accidental reentry. They will be fully incorporated in the Critical Design Review (CDR), scheduled a year after the PDR.

Significant modifications (e.g. changing to a hydrazine propulsion system and the venting of non-toxic waste gases) are currently being incorporated into the baseline Freedom program. Tier 2 of the EIS will address the environmental impacts of these modifications, the probability of accidental reentry of the manned base, and the injury/damage probability associated with such reentry.

The Power Tower and Man-Tended Approach alternatives would have essentially the same environmental impact as the proposed action.

With the no action alternative, the environmental impacts would not be significantly different from the proposed action because additional Shuttle or Expendable Launch Vehicle (ELV) flights would be needed to deploy and operate payloads which would have been on the Space Station. The return to Earth of debris from a satellite or an ELV would be substantially less than that from the Space Station, but could result in an impact similar to that from an uncontrolled reentry of the Space Station.

TABLE OF CONTENTS

	Page
COVER SHEET	i
SUMMARY	iii
TABLE OF CONTENTS	v
LIST OF TABLES	x
LIST OF FIGURES	xi
ABBREVIATIONS AND ACRONYMS	xiii
1.0 PURPOSE OF AND NEED FOR ACTION	1-1
1.1 INTRODUCTION	1-1
1.1.1 Background	1-1
1.1.2 Program Objectives	1-1
1.2 NEED FOR THE PROPOSED ACTION	1-3
1.3 PURPOSE OF THE PROPOSED ACTION	1-3
1.4 APPROACH TO EIS DEVELOPMENT	1-4
1.5 RESULTS OF THE SCOPING PROCESS	1-4
2.0 ALTERNATIVES, INCLUDING THE PROPOSED ACTION	2-1
2.1 ALTERNATIVES CONSIDERED	2-1
2.2 DESCRIPTION OF THE PROPOSED ACTION TO PROCEED WITH THE SPACE STATION FREEDOM PROGRAM	2-1
2.2.1 Description of Space Station Freedom	2-1
2.2.1.1 Baseline Space Station Freedom (Manned Base) Elements	2-2
2.2.1.2 Free Flying Platforms	2-13
2.2.1.3 Assembly Sequence	2-13
2.2.2 Space Station Freedom Development Plan	2-16
2.2.3 Space Station Freedom Operation	2-21
2.2.4 Decommissioning	2-21
2.3 DESCRIPTION OF THE POWER TOWER CONFIGURATION ALTERNATIVE	2-23
2.3.1 Power Tower Manned Base	2-23
2.3.2 Unmanned Platforms	2-25
2.3.3 Rationale for Not Selecting the Power Tower Configuration	2-27
2.4 MAN-TENDED APPROACH (MTA)	2-27
2.4.1 Background	2-27
2.4.2 Configuration	2-28
2.4.3 Rationale for Not Selecting the MTA	2-28
2.5 NO ACTION ALTERNATIVE	2-30

2.6 ENVIRONMENTAL CONSEQUENCES OF ALTERNATIVES 2-31

2.6.1 Development and Manufacture 2-31

2.6.1.1 Proposed Action 2-31
2.6.1.2 Power Tower 2-31
2.6.1.3 Man-Tended Approach 2-31
2.6.1.4 No Action Alternative 2-31

2.6.2 Normal Operations 2-33

2.6.2.1 Proposed Action 2-33
2.6.2.2 Power Tower 2-33
2.6.2.3 Man-Tended Approach 2-33
2.6.2.4 No Action Alternative 2-33

2.6.3 Unplanned Return to Earth 2-33

2.6.3.1 Proposed Action 2-33
2.6.3.2 Power Tower 2-34
2.6.3.3 Man-Tended Approach 2-34
2.6.3.4 No Action Alternative 2-34

2.6.4 Summary 2-34

3.0 AFFECTED ENVIRONMENT 3-1

3.1 THE ATMOSPHERE 3-1

3.1.1 The Troposphere 3-1

3.1.1.1 Air Quality 3-1
3.1.1.2 Greenhouse Effect 3-1

3.1.2 The Stratosphere 3-4
3.1.3 The Mesosphere 3-5
3.1.4 The Ionosphere 3-5

3.2 NATURAL RESOURCES 3-5

3.2.1 Energy Sources 3-5
3.2.2 Rare Elements 3-6

3.3 SITE SPECIFIC ENVIRONMENT 3-6

3.3.1 George C. Marshall Space Flight Center (MSFC) (Work Package 1) 3-6

3.3.1.1 Land Use 3-6
3.3.1.2 Hydrology and Water Use 3-6
3.3.1.3 Air Resources 3-6
3.3.1.4 Socioeconomic Factors 3-7
3.3.1.5 Additional Factors 3-7

3.3.2 Lyndon B. Johnson Space Center (JSC) (Work Package 2) 3-7

3.3.2.1 Land Use 3-7
3.3.2.2 Hydrology and Water Use 3-7
3.3.2.3 Air Resources 3-7
3.3.2.4 Socioeconomic Factors 3-8
3.3.2.5 Additional Factors 3-8

3.3.3 Goddard Space Flight Center (GSFC) (Work Package 3) 3-8

3.3.3.1 Land Use 3-8
3.3.3.2 Hydrology and Water Use 3-8
3.3.3.3 Air Resources 3-8
3.3.3.4 Socioeconomic Factors 3-9
3.3.3.5 Additional Factors 3-9

3.3.4 Lewis Research Center (LeRC) (Work Package 4) 3-9

3.3.4.1 Land Use 3-9
3.3.4.2 Hydrology and Water Use 3-9
3.3.4.3 Air Resources 3-10
3.3.4.4 Socioeconomic Factors 3-10
3.3.4.5 Additional Factors 3-10

3.3.5 John F. Kennedy Space Center (KSC) 3-11

3.3.5.1 Land Use 3-11
3.3.5.2 Hydrology and Water Use 3-11
3.3.5.3 Air Resources 3-11
3.3.5.4 Socioeconomic Factors 3-11
3.3.5.5 Additional Factors 3-12

3.3.6 Vandenberg Air Force Base (VAFB) 3-12

3.3.6.1 Land Use 3-12
3.3.6.2 Hydrology and Water Use 3-12
3.3.6.3 Air Resources 3-12
3.3.6.4 Socioeconomic Factors 3-12
3.3.6.5 Additional Factors 3-13

4.0 ENVIRONMENTAL CONSEQUENCES 4-1

4.1 POTENTIALLY SIGNIFICANT IMPACTS 4-1

4.1.1 Space Station Reentry 4-1

4.1.1.1 Possible Causes of Space Station Freedom Reentry .. 4-1
4.1.1.2 Measures Taken to Prevent Space Station Freedom Reentry 4-4
4.1.1.3 Environmental Impact from Reentry 4-5
4.1.1.4 Incomplete and Unavailable Information 4-7

4.1.2 Space Station Freedom Decommissioning 4-7
4.1.3 Payload Operations 4-8

4.1.4 Return and Disposal of Waste Material 4-8

4.1.4.1 U.S. Laboratory Module and Logistics Carriers 4-8
4.1.4.2 International Laboratory Modules 4-15
4.1.4.3 Habitation Module 4-15

4.2 ADDITIONAL IMPACTS 4-16

4.2.1 Atmospheric Impacts 4-16

4.2.1.1 Introduction 4-16
4.2.1.2 Tropospheric Impacts 4-16
4.2.1.3 Stratospheric and Mesospheric Impacts 4-17
4.2.1.4 Ionospheric Impacts 4-17

4.2.2 Aquatic and Terrestrial Ecology 4-20
4.2.3 Water Quality 4-20
4.2.4 Noise 4-21
4.2.5 Transportation 4-21
4.2.6 Nonionizing Radiation 4-21
4.2.7 Socioeconomic Effects 4-21

4.2.7.1 George C. Marshall Space Flight Center - Work Package 1 4-22
4.2.7.2 Lyndon B. Johnson Space Center - Work Package 2 4-23
4.2.7.3 Goddard Space Flight Center (GSFC) - Work Package 3 4-25
4.2.7.4 Lewis Research Center (LeRC) - Work Package 4 4-25
4.2.7.5 John F. Kennedy Space Center (KSC) 4-27
4.2.7.6 Vandenberg Air Force Base (VAFB) 4-28

4.3 ENVIRONMENTAL CONSEQUENCES OF THE POWER TOWER ALTERNATIVE 4-28

4.4 ENVIRONMENTAL CONSEQUENCES OF THE MAN-TENDED APPROACH (MTA) 4-28

4.5 ENVIRONMENTAL CONSEQUENCES OF THE NO ACTION ALTERNATIVE 4-28

4.5.1 Physical Effects 4-28

4.5.1.1 Debris Reentry 4-29
4.5.1.2 Atmospheric Impacts 4-29
4.5.1.3 Aquatic and Terrestrial Ecology 4-29
4.5.1.4 Water Quality 4-29
4.5.1.5 Noise 4-30
4.5.1.6 Transportation 4-30
4.5.1.7 Toxic Materials 4-30

4.5.2 Socioeconomic Effects 4-30

4.6 RELATIONSHIP BETWEEN SHORT-TERM USES OF MAN'S ENVIRONMENT AND MAINTENANCE AND ENHANCEMENT OF LONG-TERM PRODUCTIVITY 4-30

4.7 IRREVERSIBLE OR IRRETRIEVABLE COMMITMENT OF RESOURCES ... 4-31

4.7.1 Natural Resources 4-31

4.7.1.1 Material Requirements 4-31
4.7.1.2 Energy Requirements 4-32
4.7.1.3 Changes in Biological Resources 4-32

4.7.2 Cultural Resources 4-32

4.8 UNAVOIDABLE ADVERSE IMPACTS 4-33

5.0 CONTRIBUTORS TO THE EIS 5-1

6.0 DISTRIBUTION LIST 6-1

7.0 INDEX 7-1

APPENDICES

A. DEFINITIONS A-1
B. REFERENCES B-1
C. GROUND-BASED FACILITIES C-1
D. SPACE STATION EIS METHODOLOGY D-1
E. COMMENT LETTERS AND RESPONSES E-1

LIST OF TABLES

TABLE	TITLE	PAGE
Table 2-1	Summary of Work Package Contractors	2-18
Table 2-2	Summary Comparison of Alternatives	2-32
Table 3-1	National Ambient Air Quality Standards	3-3
Table 4-1	Microgravity Materials Processing Facility (MMPF) Summary of Sample Consumables	4-10
Table 4-2	Microgravity Materials Processing Facility (MMPF) Summary of Sample Wastes	4-11
Table 4-3	Potential Laboratory Module Toxic Waste Products	4-12
Table 4-4	Possible Space Station Contaminants	4-18

LIST OF FIGURES

FIGURE	TITLE	PAGE
Figure 1-1	Space Station Freedom - Baseline Configuration	1-2
Figure 2-1	U.S. Laboratory Module	2-3
Figure 2-2	Space Station Habitation Module	2-4
Figure 2-3	ESA Contributions to Space Station Freedom	2-6
Figure 2-4	Japanese Experiment Module, Logistics Module and Exposed Facility	2-7
Figure 2-5	Location of Nodes, Logistics Carriers and Cupolas	2-8
Figure 2-6	Logistics Carrier	2-9
Figure 2-7	Canadian Mobile Servicing System	2-11
Figure 2-8	Flight Telerobotics Servicer	2-12
Figure 2-9	U.S. Polar Orbiting Platform (POP)	2-14
Figure 2-10	Assembly Sequence	2-15
Figure 2-11	Geographical Distribution of Contractors	2-17
Figure 2-12	Space Station Freedom Program Milestones	2-20
Figure 2-13	Space Station Freedom Operations Functions	2-22
Figure 2-14	Power Tower Configuration	2-24
Figure 2-15	Core Platform (Without Payload)	2-26
Figure 2-16	Man-Tended Approach Capture	2-29
Figure 3-1	Locations of the Troposphere, Stratosphere, Mesosphere and Ionosphere Atmospheric Layers and the Space Station Freedom	3-2
Figure 4-1	Space Station Orbit Maintenance Strategy	4-3
Figure 4-2	Plot of Two Space Station Freedom Ground Tracks	4-6

ABBREVIATIONS AND ACRONYMS

ac	alternating current
AC	Assembly Complete
ACS	Attitude Control System
AFB	Air Force Base
APAE	Attached Payload Accommodations Equipment
BCD	Baseline Configuration Document
CDR	Critical Design Review
CETF	Critical Evaluation Task Force
CLWA	Clear Lake Water Authority
cm	centimeter
CMG	Control Moment Gyroscope
CO2	Carbon Dioxide
COP	Co-Orbiting Platform
CRRES	Combined Release and Radiation Effects Satellite
CSD	Contract Start Date
DCR	Design Certification Review
ECLSS	Environmental Control and Life Support System
EDO	Extended Duration Orbiter
EF	Exposed Facility
EIS	Environmental Impact Statement
ELM	Experiment Logistics Module
ELV	Expendable Launch Vehicle
EPA	Environmental Protection Agency
EPS	Electrical Power System
ERD	Environmental Resources Document
ESA	European Space Agency
ESC	Engineering Support Center
EVA	Extravehicular Activity
FAA	Federal Aviation Administration
FEL	First Element Launch
FFRR	First Flight Readiness Review
FTE	Full Time Equivalent
FTS	Flight Telerobotic Servicer
FY	Fiscal Year
GN&C	Guidance, Navigation, and Control
GSFC	Goddard Space Flight Center

H2	Hydrogen
H2O	Water
HQ	Headquarters (NASA)
in	inch
IOC	Initial Operating Capability
JEM	Japanese Experiment Module
JPL	Jet Propulsion Laboratory
JSC	Johnson Space Center
kg	kilogram
km	kilometers
KSC	Kennedy Space Center
LaRC	Langley Research Center
LeRC	Lewis Research Center
LM	Logistics Module
LOC	Logistics Operations Center
LVLH	Local Vertical-Local Horizontal
MCC	Mission Control Center
MDAC	McDonnell Douglas
min	minute
mm	millimeter
MMH	Monomethyl Hydrazine
MML	Man-Tended Multipurpose Laboratory
MMPF	Microgravity and Materials Processing Facility
MOU	Memorandum of Understanding
mph	miles per hour
MRMS	Mobile Remote Manipulator System
MSC	Mobile Servicing Center
MSFC	Marshall Space Flight Center
MSS	Mobile Servicing System
MTA	Man-Tended Approach
MTC	Man-Tended Capability
N2O4	Nitrogen Tetroxide
NAAQS	National Ambient Air Quality Standards
NAC	NASA Advisory Council
NASA	National Aeronautics and Space Administration
NASDA	National Space Development Agency (Japan)
nm	Nanometers
n.m.	Nautical Miles

NOAA	National Oceanic and Atmospheric Administration
NORAD	North American Air Defense Command
NPDES	National Pollution Discharge Elimination System
NSTS	National Space Transportation System
OMS	Orbital Maneuvering Subsystem
ORR	Operations Readiness Review
ORU	Orbital Replacement Unit
OSHA	Occupational Safety and Health Administration
PDR	Preliminary Design Review
PLM	Pressurized Logistics Module
PM	Pressurized Module
PMAD	Power Management and Distribution System
PMC	Permanently Manned Capability
POIC	Payload Operations Integration Center
POP	Polar Orbiting Platform
PRR	Program Requirements Review
PSC	Platform Support Center
PSCN	Program Support Communications Network
PSRB	Program Safety Review Board
PTIF	Payload Training Integration Facility
PTOC	Payload Transfer Operations Center
PTOP	Payload Transfer Operations Plan
QA	Quality Assurance
RCRA	Resource Conservation and Recovery Act
R/T	Real-Time
RF	Radio Frequency
RFF	Request for Flight
RFP	Request for Proposal
RMS	Remote Manipulator System
ROC	Regional Operations Center
S&T	Science and Technology
SLC	Shuttle Launch Complex (VAFB)
SPM	Solar Power Module
SS	Space Station
SSCC	Space Station Control Center
SSFE	Space Station Flight Element
SSFP	Space Station Freedom Program
SSMB	Space Station Manned Base

SSP	Space Station Program
SSPF	Space Station Processing Facility
SSPO	Space Station Program Office
SSSC	Space Station Support Center
SSTF	Space Station Task Force
TADCORPS	Technical and Administrative Services Corporation
TCS	Thermal Control System
TDRSS	Tracking and Data Relay Satellite System
TDS	Total Dissolved Solids
UNEP	United Nations Environment Program
USAF	United States Air Force
USFWS	U.S. Fish and Wildlife Service
USL	United States Laboratory
UV	Ultraviolet
VAFB	Vandenburg Air Force Base
WMA	Waste Management Authority
WMO	World Meteorological Organization
WP	Work Package
WTR	Western Test Range

1.0 PURPOSE OF AND NEED FOR ACTION

Space Station Freedom is a National Aeronautics and Space Administration (NASA) program which will include elements to be developed by international partners. These partners are Japan, Canada, and the nine member countries (Belgium, Denmark, France, Italy, the Federal Republic of Germany, the Netherlands, Norway, Spain, and the United Kingdom) of the European Space Agency (ESA) which are party to the formal international agreements of September 29, 1988. Space Station Freedom will be designed as an orbiting research laboratory for scientific experiments, development of technologies, and stimulation of commercial space enterprises.

This Tier 1 Environmental Impact Statement (EIS) has been prepared to provide the information necessary to support decision making as the Space Station Freedom program enters the design and development phase. It presents an analysis of the environmental impacts of Space Station Freedom from design and development through its decommissioning thirty or more years after First Element Launch (FEL). The proposed action is the design, development, assembly, and operation of Space Station Freedom, with a FEL in 1995.

1.1 INTRODUCTION

1.1.1 Background

In May 1982, NASA formed a Space Station Task Force (SSTF) to develop concepts for a permanently manned Space Station to be deployed in low Earth orbit. Approximately one year later, NASA released a concept for review within the federal government. In January 1984, President Reagan committed the nation to the goal of developing a permanently manned Space Station within a decade. He invited other nations to participate, and Japan, Canada, and ESA accepted.

NASA established a Space Station Program Office (SSPO) in April, 1984, which developed a reference configuration called the "Power Tower." The Power Tower had a single vertical keel flying in gravity-gradient mode with articulated solar arrays and five pressurized modules located at the lower end of the structure. During the Space Station definition phase, this configuration was changed to a "Dual-Keel" configuration to satisfy additional user requirements. The Dual Keel configuration moved the pressurized modules to the center of gravity along a transverse boom and increased the amount of truss structure.

In 1987, NASA elected to develop the Space Station using a phased approach. The baseline Station is essentially the same as the Dual Keel configuration without the two vertical keels and with some changes in systems and payload accommodations. The Space Station is shown in Figure 1-1 and described in Section 2.2.1. On July 18, 1988, President Reagan christened the Space Station "Freedom."

1.1.2 Program Objectives

The program objectives for Space Station Freedom are as follows [1]:

- To establish a permanently-manned, multipurpose facility in low Earth orbit in the 1990s.
- To enhance and evolve mankind's ability to live and work safely in space.

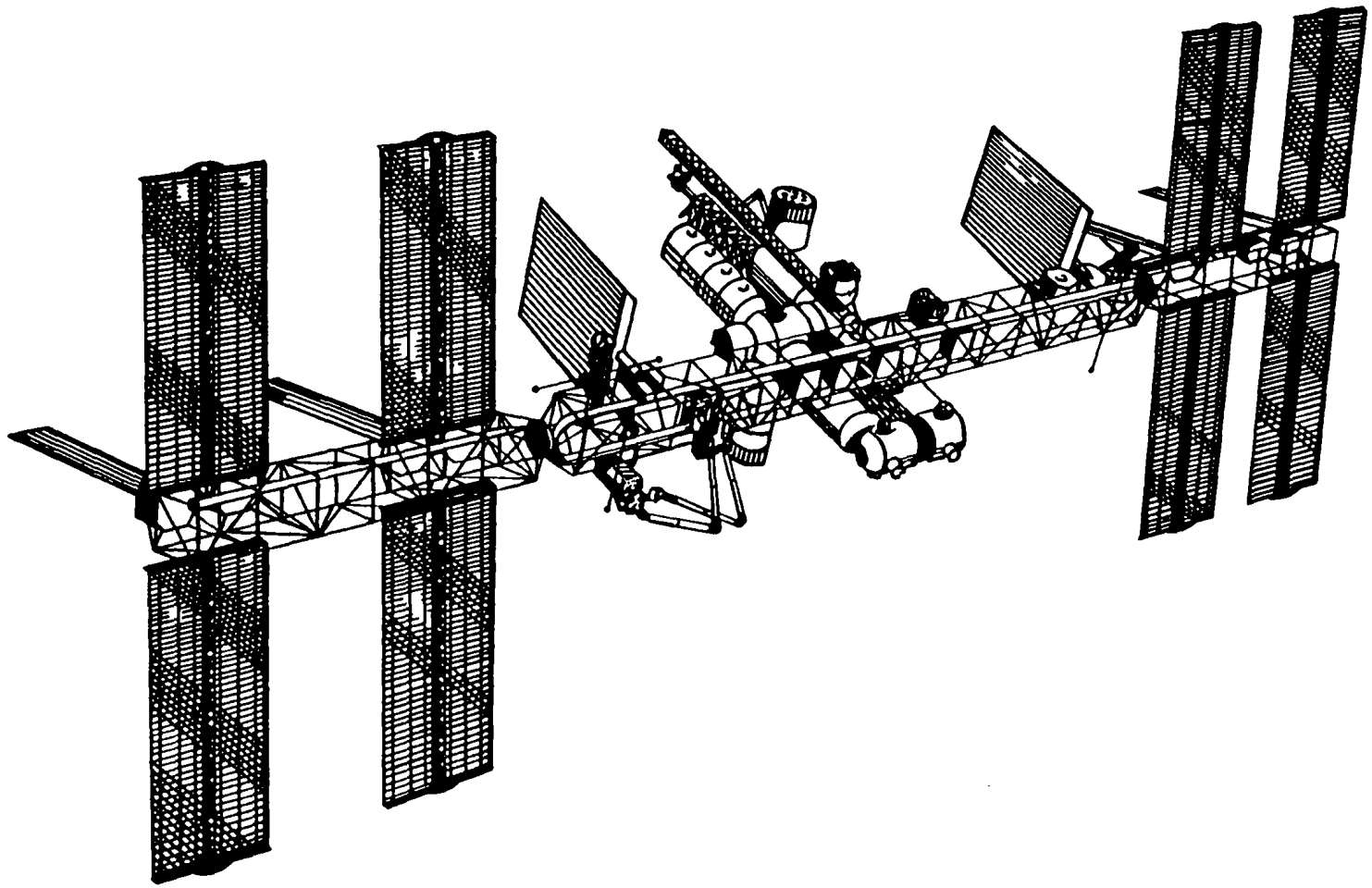

Figure 1-1 Space Station Freedom - Baseline Configuration (Platforms not Shown)

- To stimulate technologies of national importance (especially automation and robotics).
- To provide long-term, cost-effective operation and utilization of improved facilities for scientific, technological, commercial, and operational activities enabled or enhanced by the presence of humans in space.
- To promote substantial international cooperation in space.
- To create and expand opportunities for private sector activity in space.
- To provide for the evolution of the Space Station to meet future needs and challenges.
- To provide unmanned platforms from which to perform long-duration research and operational observations.

1.2 NEED FOR THE PROPOSED ACTION

The National Aeronautics and Space Act of 1958[2] directs NASA to pursue a number of objectives. These include:

- The expansion of human knowledge of phenomena in the atmosphere and space
- The development and operation of vehicles capable of carrying instruments, equipment, supplies, and living organisms through space
- The preservation of the role of the United States as a leader in... space science and technology and in the application thereof to the conduct of peaceful activities... outside the atmosphere
- Cooperation by the United States with other nations and groups of nations in work done pursuant to this Act and in the peaceful application of the results thereof...

As a means of meeting these objectives President Reagan during his State of the Union Address on January 25, 1984, directed NASA "to develop a permanently manned Space Station and do it within a decade." On August 15, 1984, the President approved a National Space Strategy designed to implement the national policy for space which included establishment of a permanently manned presence in space[3].

Beginning in 1984, each year Congress has included funding for the design of a permanently manned Space Station in the NASA budget. In the NASA Authorization Acts of 1988 and 1989, Congress authorized funds for the development of Space Station Freedom.

1.3 PURPOSE OF THE PROPOSED ACTION

The purpose of the proposed action is to fulfill the goals of the NASA Charter and the National Space Policy, and to respond to the President's directive to develop a Space Station. This action, development and operation of Space Station Freedom,

enables NASA to meet the needs of scientific, technological, and commercial research, of international cooperation, and of a permanently manned presence in space. Space Station Freedom will be designed specifically to meet these needs and to provide a foundation for space research and exploration into the next century.

1.4 APPROACH TO EIS DEVELOPMENT

This EIS analyzes the currently available alternatives for a Space Station Freedom program. It will serve as the environmental documentation necessary to aid the decision maker in his or her decision regarding these alternatives. This decision will be documented in a NASA Record of Decision which will be filed no sooner than 30 days after the Environmental Protection Agency's Federal Register Notice of the final EIS for the Space Station Freedom Program.

NASA may supplement this EIS with further documentation, as events may require, concerning individualized or site specific impacts. Such documentation could be in the form of additional analyses, environmental assessments, or environmental impact statements, as appropriate.

As a result of the Fiscal Year 1990 budgetary review process NASA has rephased some hardware in the program, and modified some systems and subsystems. The full environmental analysis of these changes is not yet complete. However, the development process is maintained by holding the FEL in 1995. Tier 2 of the EIS will reflect the significant modifications which are being incorporated into the baseline program.

1.5 RESULTS OF THE SCOPING PROCESS

NASA conducted two meetings to define the scope of the EIS on August 19, 1986 and May 9, 1988. The participants identified five areas where significant environmental impacts could potentially arise. These areas are:

- Space Station Freedom's orbital maintenance strategy, including:
  - the periodic reboost of Space Station Freedom's manned base to maintain orbit
  - Accidental reentry of Space Station Freedom's elements
- Decommissioning strategies for Space Station Freedom's elements at the end of their useful lives
- Impacts of debris released by Space Station Freedom which survives reentry
- Return and disposal of waste material, including toxic waste, from Space Station Freedom
- Impacts from the payload mission set to be flown on Space Station Freedom

This EIS discusses each of these areas of potential concern.

2.0 ALTERNATIVES, INCLUDING THE PROPOSED ACTION

Four alternatives were explored in this EIS: the proposed action to design, develop, and operate the Space Station Freedom Program, a different Space Station configuration, a Space Station which is not permanently manned, and termination of the Space Station Freedom Program (the no action alternative).

2.1 ALTERNATIVES CONSIDERED

Under the proposed action, Space Station Freedom will be developed with a FEL in 1995, a Permanent Manned Capability (PMC) in 1996, and the Assembly Complete (AC) in 1999. During its lifetime, Space Station Freedom is expected to accommodate hundreds of experiments and payloads on all of its elements. The characteristics of the program, including the development plan, the operations concept, and the decommissioning plan, are outlined below.

The alternative configuration, called the "Power Tower," is the early Space Station design which was developed during the program's concept development stage. Another configuration which would not include having a crew permanently manning the Space Station, the MTA, has been considered because Congress requested additional information on it in 1985. The no action alternative involves terminating the Space Station Freedom Program and reassigning payloads to other vehicles and/or programs where possible. Each of these alternatives is discussed below.

2.2 DESCRIPTION OF THE PROPOSED ACTION TO PROCEED WITH THE SPACE STATION FREEDOM PROGRAM

The proposed action is to design, develop, and operate the Space Station Freedom Program. Operations will last for thirty years or more. This includes options for decommissioning Space Station Freedom at the end of its operations.

2.2.1 Description of Space Station Freedom

The program objectives will be carried out in a variety of elements, systems, and platforms supplied by NASA, contractors, and international partners. ESA will supply a pressurized laboratory module, a free flying laboratory, and a polar platform. Japan will provide an experiment module and an unpressurized exposed facility, plus an experiment logistics module. Canada will provide a mobile servicing center for assembly, routine servicing, and maintenance of the Station and attached payloads. The United States will provide a laboratory module, a crew habitation module, the truss structure and attached payload accommodations, a flight telerobotic servicer, all distributed systems, subsystems, and a polar platform.

The baseline Space Station Freedom will consist of four major elements which are the manned base, a free flying laboratory, and two polar orbiting platforms. The manned base will fly in low Earth orbit from 278 kilometers (150 n.m.) to 500 km (270 n.m.) from the Earth at a 28.5 degree inclination. The average operating altitude will be 463 km (250 n.m.). Flying at an orbital velocity of about 18,000 miles per hour, the manned base will circumnavigate the Earth approximately every 90 minutes.

The ESA Columbus Free Flying Laboratory for microgravity experiments will fly in approximately the same orbit as the manned base. It will be serviced periodically

either at the manned base or by ESA's Hermes spacecraft. Two other platforms, supplied by the U.S. and ESA respectively, will fly in sun-synchronous polar orbits about 705 km (380 n.m.) above the Earth with an inclination of 98.2 degrees with the Equator. The co-orbiting and polar platforms are integral parts of the Space Station Freedom Program. The U.S. Polar Platform will be launched by an ELV and will not be attached to the manned base. The Columbus Free Flying Laboratory and Polar Platform will be launched by ESA's Ariane rocket.

The following are descriptions of each of the Station flight elements starting with the manned base and working out to the free flying platforms.

2.2.1.1 Baseline Space Station Freedom (Manned Base) Elements

1. Truss Assembly

The Truss Assembly will include the transverse boom, two alpha joints and drive mechanism for solar pointing, the truss-installed distributed and element unique systems, and provisions for mounting and attaching other elements [4]. The truss is 149 meters (491 feet) long and 5 meters (16.4 feet) square. It will be assembled in space and will provide a stable base for all the core modules, resource pallets, equipment for extravehicular activity, external lighting, and extenders for the photovoltaic power systems at each end. It will house utility distribution trays for all the system lines for thermal, power, fluid, and data management of the Station. Utility ports for external attached payloads are also present on the transverse boom.

2. U.S. Laboratory Module (Figure 2-1)

The U.S. Laboratory Module will be a 13.4 meter (44.5 feet) long cylinder with a diameter of 4.45 meters (14.4 feet). It will be attached at a right angle to the transverse boom near its center. It will be pressurized at 14.7 psi, which is equivalent to sea level pressure. The laboratory will be designed to accommodate: (1) materials research and development most sensitive to microgravity; (2) research in basic biology, physics, and chemistry requiring long duration exposure to microgravity; (3) control support to pressurized payloads; (4) the maintenance and servicing of Orbital Replacement Units (ORUs) and user facilities and equipment requiring workbench support in a pressurized volume; and (5) life science research relating to adaptation to long duration exposure to microgravity[4].

3. Habitation Module (Figure 2-2)

The Habitation Module will provide the living environment for eight crewmembers. Specifically it will contain the crew quarters, galley, wardroom, general workstation, personal hygiene facility, crew emergency health care system, exercise equipment, and stowage.

It will be an environmentally protected enclosure intended for long duration crew activity and habitation functions, including eating, sleeping, exercising, medical operations and some work activities. The same size as the U.S. Laboratory Module, the Habitation Module will be located parallel and next to the U.S. Laboratory Module in the cluster of pressurized modules that make up the manned base.

Isolated somewhat from the other modules, the Habitation Module will be part of the safe haven and emergency provisions for the crew. It will have internal audio and video, data and information handling, and utility distribution and control. The

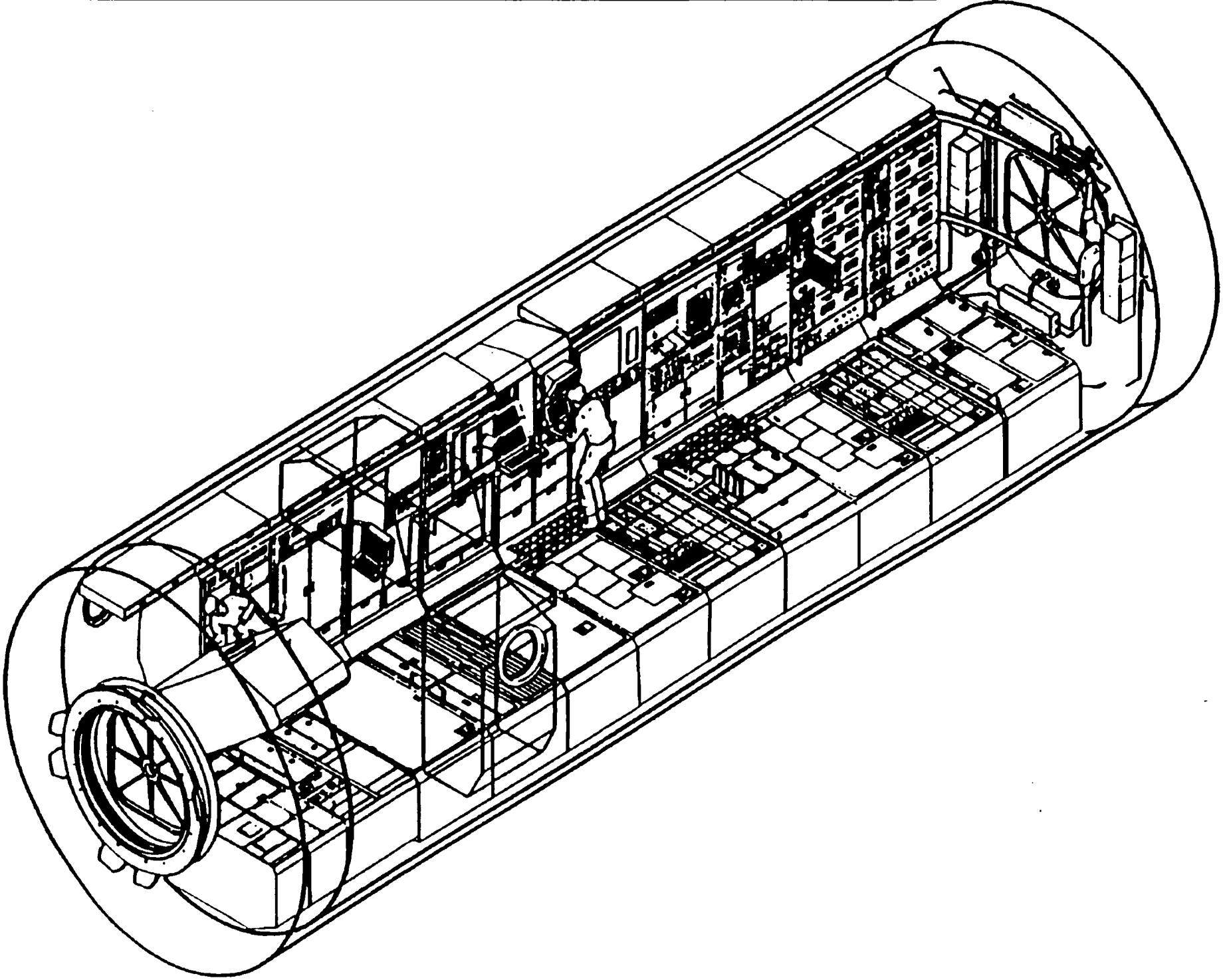

Figure 2-1 U.S. Laboratory Module

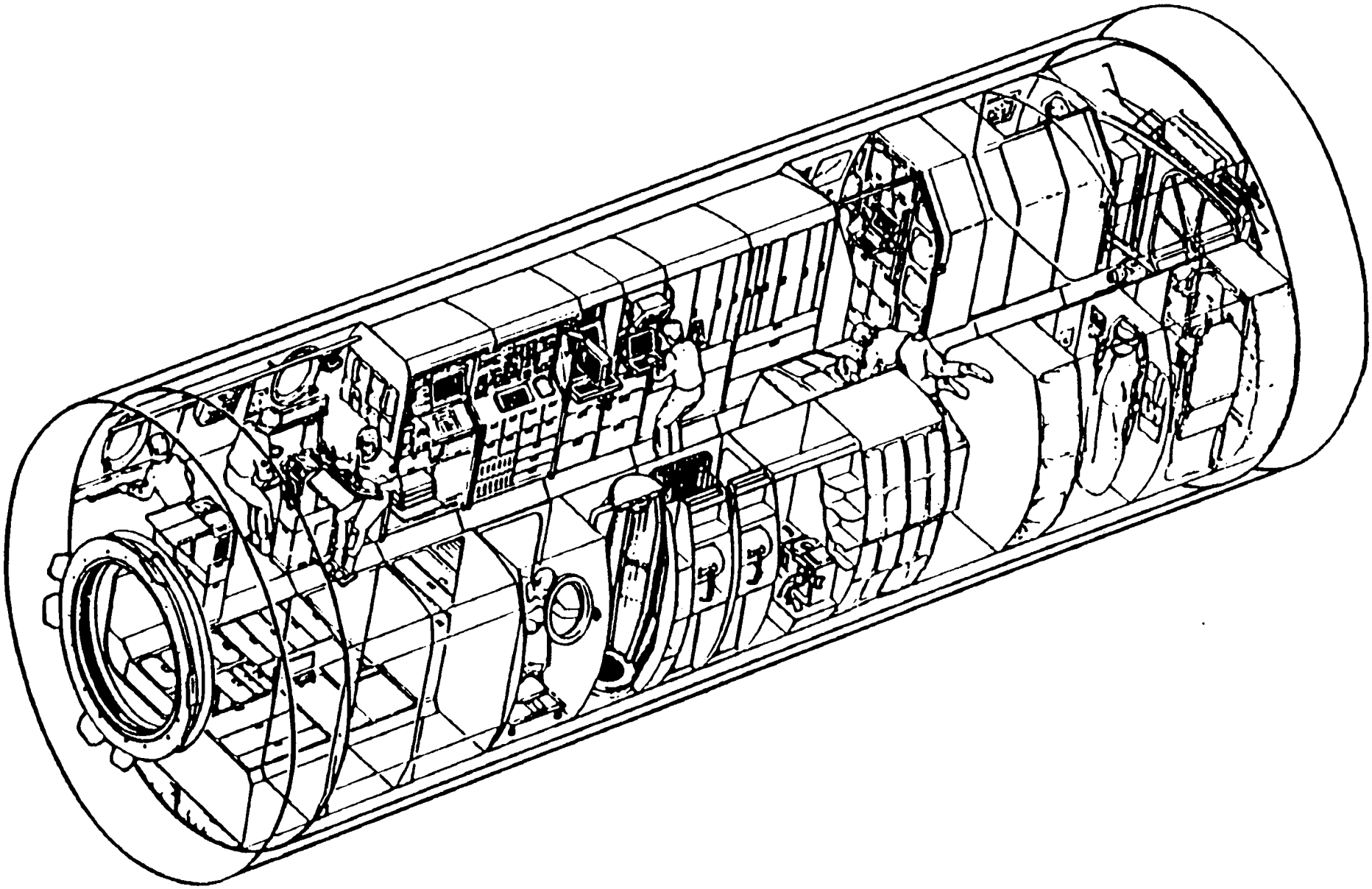

Figure 2-2 Space Station Habitation Module

floor and ceiling will be used for stowage, equipment and provisions for crew, and daily operations.

4. Columbus Attached Pressurized Module (Figure 2-3)

ESA will provide a slightly smaller pressurized laboratory, 12.8 meters (42 feet) long and 4 meters (13 feet) in diameter, devoted to the study of fluid physics, and life and material sciences. It will be situated perpendicular to the boom, adjacent to the JEM. ESA will also provide a free flying laboratory and polar platform.

5. Japanese Experiment Module (JEM) Laboratory and Exposed Facility (Figure 2-4)

The JEM will be a pressurized module 10.7 meters (35 feet) long, 4.3 meters (14 feet) in diameter, and will be operated as a multipurpose research and development laboratory. At the end of the module will be a 7.7 meter (25 foot) exposed double-truss facility for scientific observations, communications, and experiments requiring short-term space exposure. A remote manipulator system will bring the experiments to and from the airlock.

6. JEM Experiment Logistics Module (ELM)

A 14.7-foot (ELM), 4.2 meters (13.78 feet) in diameter, will attach to the JEM. The ELM will store consumable goods and other pressurized cargo, and can be removed, sent to Earth for resupply, and sent back to the JEM and reattached. It also provides for contingency rescue for the JEM crew[4].

7. Resource Nodes (Figure 2-5)

Four pressurized cylinders, about 5.18 meters (17 feet) long and 4.3 meters (14 feet in diameter, will be attached at each end of the U.S. Laboratory and Habitation Modules for command and control operations. One node, between the U.S. Laboratory and Columbus Attached Laboratory, will control the communication and tracking, propulsion, and other Station systems during assembly of the Station. A second node, between JEM and the Habitation Module, will attach to the first node and provide redundant system control. A third node, at the forward end of the U.S. Laboratory Module, and the fourth node connected to the Habitation Module will be used to control the Flight Telerobotic Servicer (FTS), and loading operations on the Shuttle when it is docked to the Station. They will also be used to provide support for Extravehicular Activity (EVA). Nodes 3 and 4 will each allow hemispheric viewing and have control of proximity operations and berthing of the Shuttle.

8. Logistics Carriers (Figure 2-6)

There will be two types of logistics carriers, pressurized and unpressurized. Both will be carried to the Station in the Shuttle cargo bay and both will be reusable.

The pressurized carriers will be designed to accommodate the resupply and return of hardware and consumables and to provide ready on-orbit access without EVA. The pressurized carriers will maintain a habitable environment for crew activity, and will provide for the accommodation of life sciences and a storage facility for equipment. The unpressurized carriers provide a capability to transport both dry cargo and fluids.

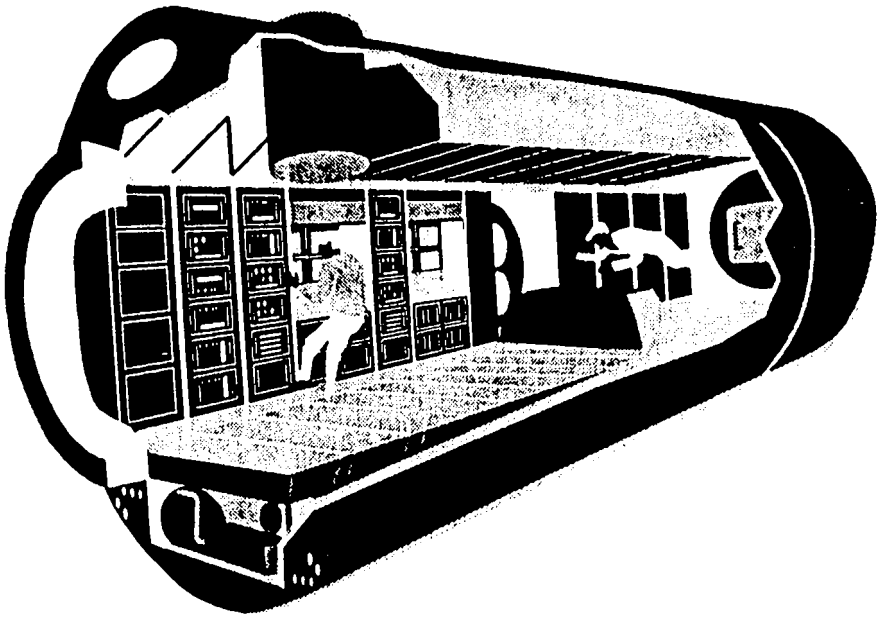

Columbus Attached Pressurized Module

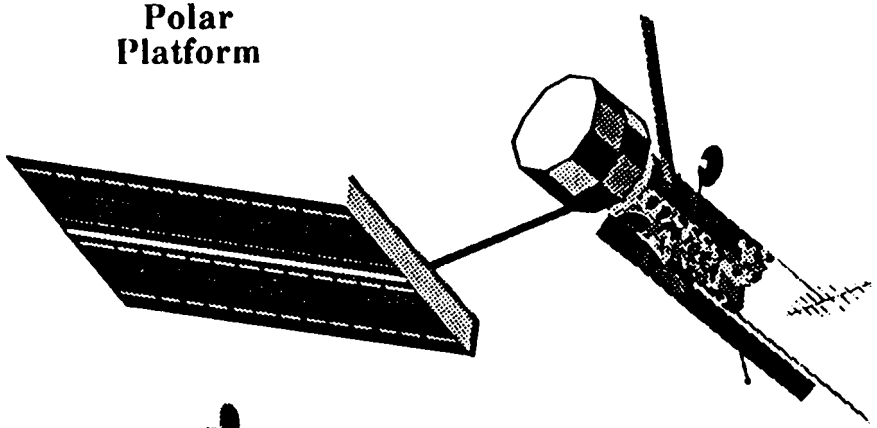

Columbus Polar Platform

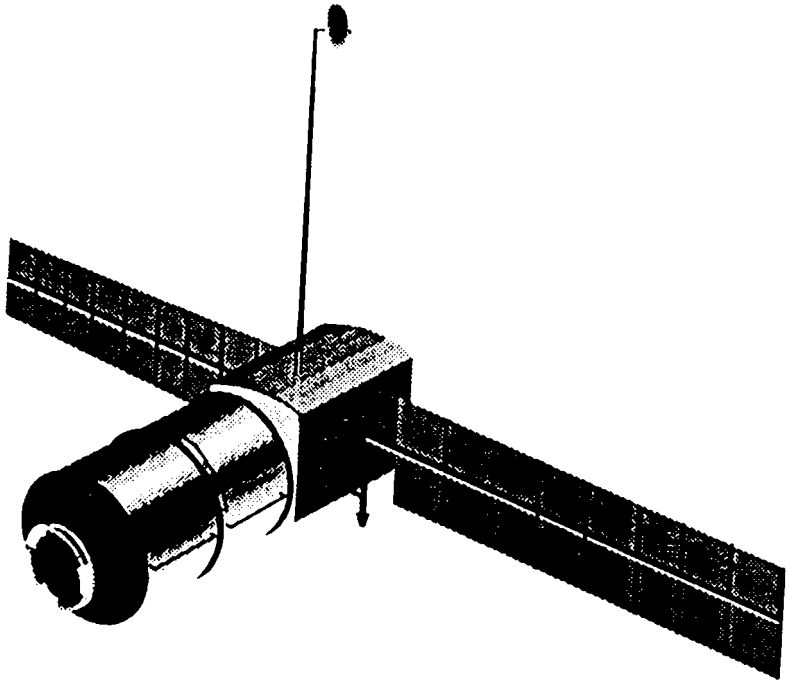

Columbus Free Flying Laboratory

Figure 2-3 ESA Contributors to Space Station Freedom

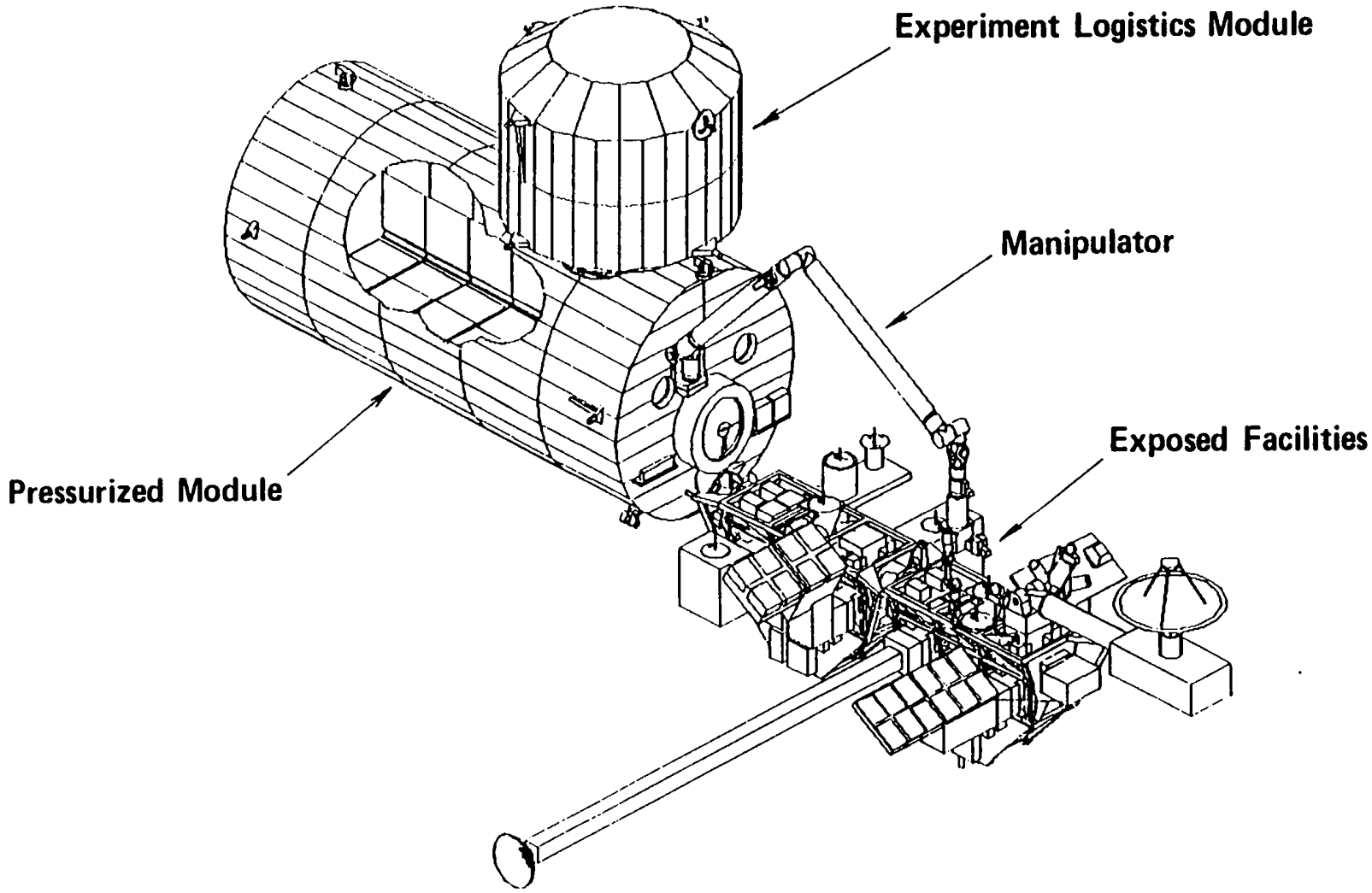

Figure 2-4 Japanese Experiment Module, Logistics Module and Exposed Facility

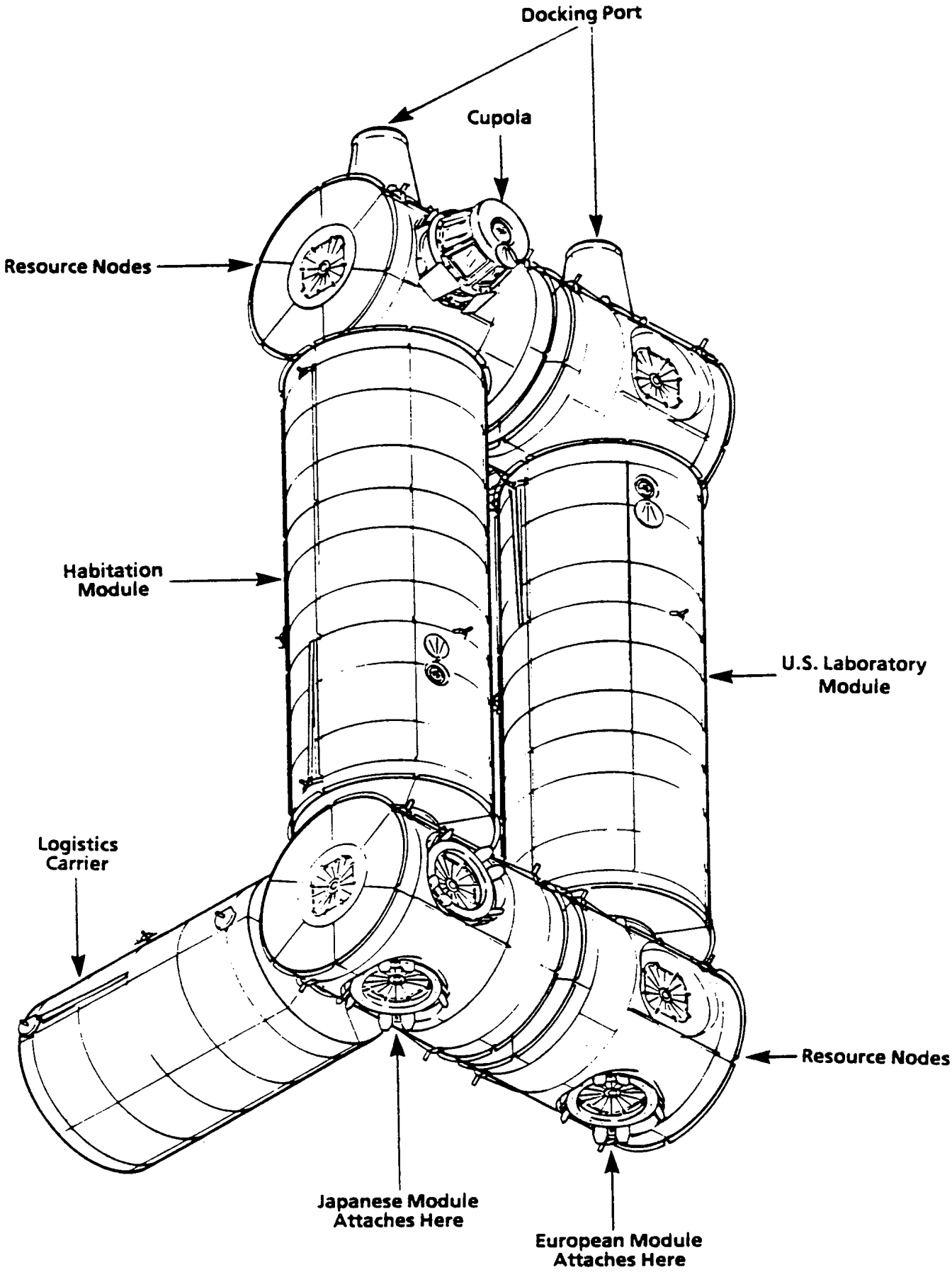

Figure 2-5 Location of Nodes, Logistics Carriers and Cupolas

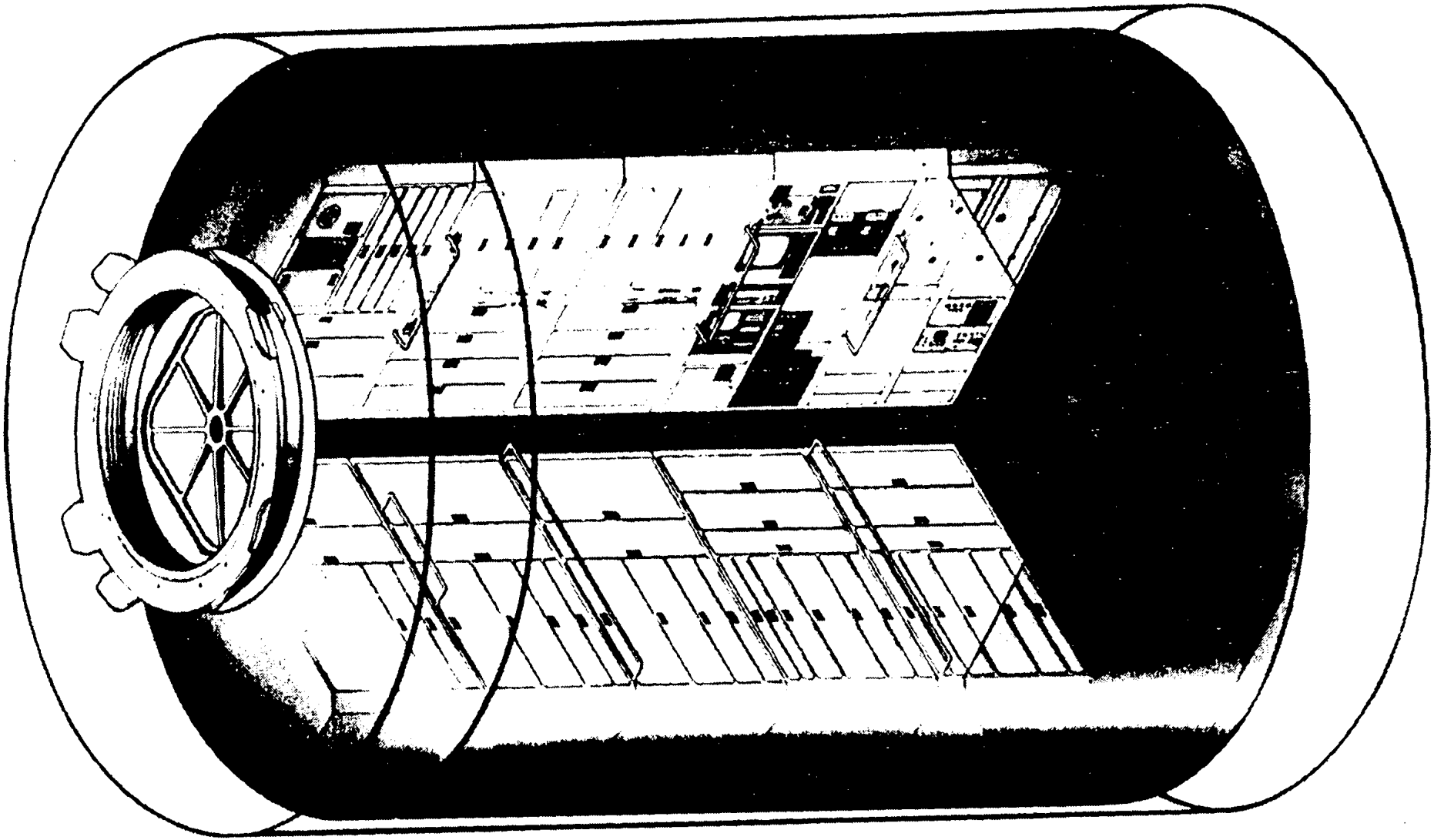

Figure 2-6 Logistics Carrier

Upon reaching the Station the logistics elements may be exchanged for logistics elements brought to the Station on a previous flight. Whenever elements are brought to the Station to replace elements already on-board, the newly arrived elements will be transferred to the Station, connected, and checked out before the returning element is removed from the Station[4].

9. Airlock

The airlock provides an effective and safe means for transfer of crew and equipment between pressurized and unpressurized zones. The airlock is a separate element attached to a node by a berthing mechanism[4]. Space Station Freedom will contain one hyperbaric airlock. It will be pressurized at sea-level pressure for suiting and unsuiting, depressurization and repressurization for EVA. The pressure will be variable, in order to treat a crew member for altitude decompression sickness (the "bends").

10. Mobile Servicing System (MSS) (Figure 2-7)

The MSS will be used to support EVA, remove cargo from the Shuttle bay, and to assemble, service and maintain the Station and attached payloads. The MSS will consist of a Canadian-provided MSC carried by a U.S.-provided rail-mounted mobile transporter along the truss. The MSC will consist of an arm-like remote manipulator system, an astronaut positioning system to move an EVA-suited crew member into position on the truss, and a special-purpose dexterous manipulator.

11. Flight Telerobotic Servicer (FTS) (Figure 2-8)

Currently in the definition stage, the FTS will be a highly sophisticated robot capable of performing precise manipulations in space. It will be used for truss assembly, installation of fixtures on the truss, and changeout of ORUs. It will also be used to perform other routine or hazardous tasks on the truss.

Astronauts will operate the FTS from several different workstations as the manned base develops.

12. Propulsion Assembly

Attitude and altitude will be controlled by four propulsion modules located on the truss. Each module will contain six thrusters, each providing twenty five pounds of thrust. The propulsion system will also include storage tanks for the hydrazine fuel. Smaller resistojets, in the $^1/_4$ -pound thrust range, will be used for additional reboost.

13. Attached Payload Accommodations Equipment (APAE)

This element includes the necessary hardware and distributed systems to attach, service, store, and operate a variety of payloads on the truss assembly[4].

14. Solar Power Module (SPM)

An SPM consists of all equipment needed to collect solar energy, convert it to electrical energy, store the energy for Station operations, transfer the electric power where it is needed, and control the generation and storage function[4].

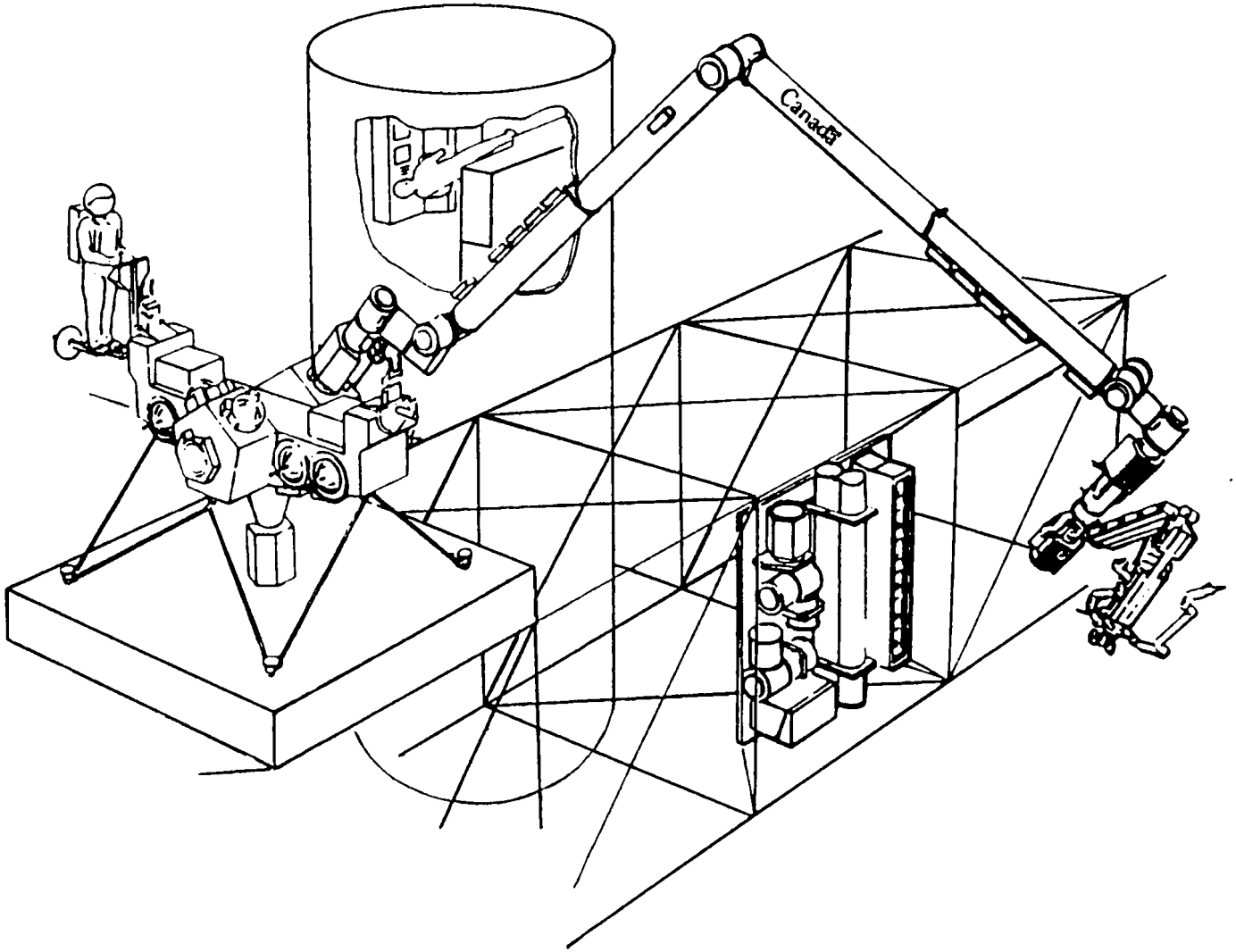

Figure 2-7 Canadian Mobile Servicing System

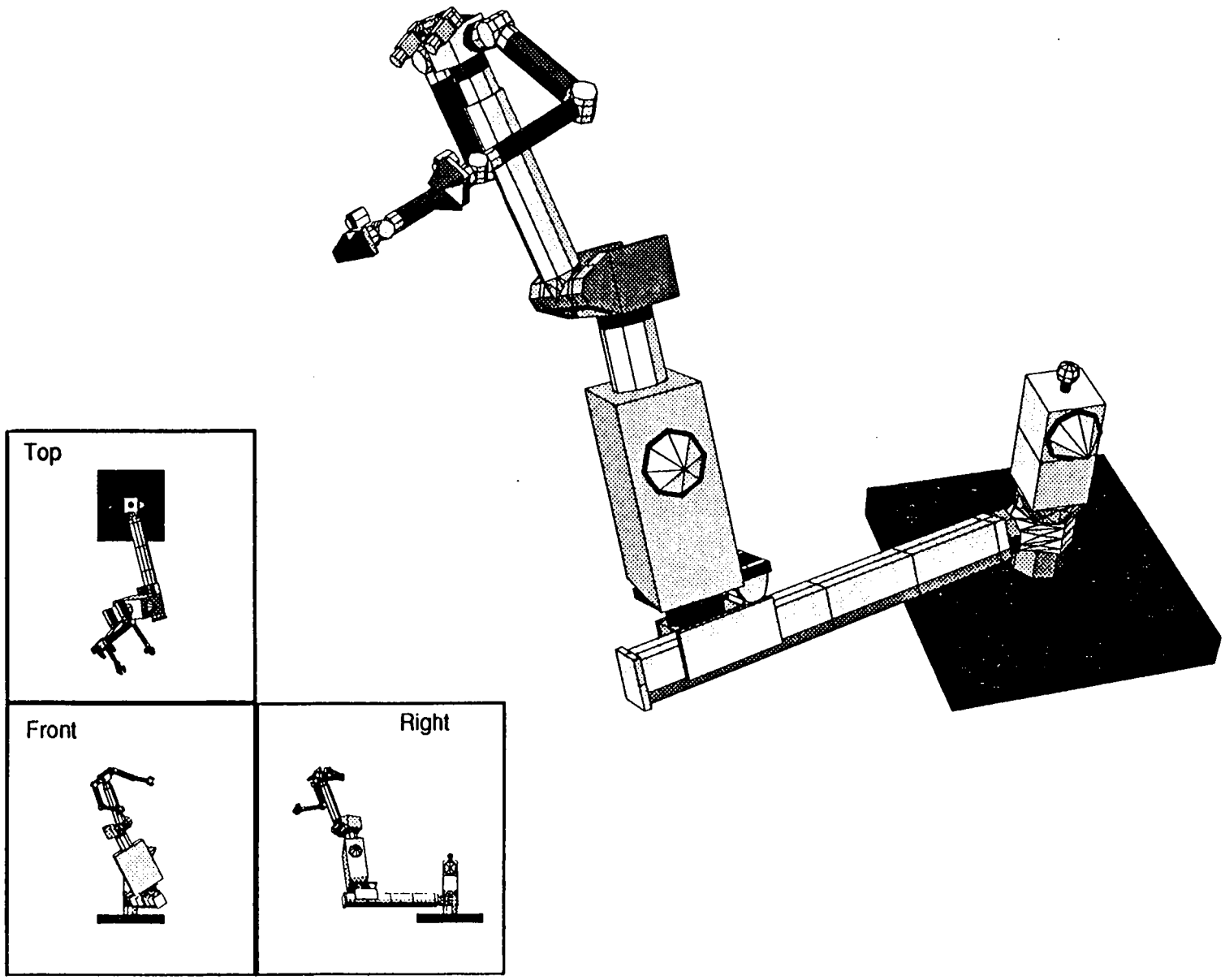

Figure 2-8 Flight Telerobotics Servicer (Goddard Design Reference)

Initially, power will be provided by eight solar array wings. Each 10.5 x 35 meter wing consists of two blanket assemblies covered with solar cells. Nickel-hydrogen batteries will store the energy produced by the solar arrays for use when the Station is in the Earth's shadow. A Power Management and Distribution System (PMAD), will deliver controlled power to many scattered users.

2.2.1.2 Free Flying Platforms

Space Station Freedom will include three free flying platforms, each considered part of the Station, but not attached to the manned base.

1. U.S. Polar Orbiting Platform (POP) (Figure 2-9)

This self-contained, free flying spacecraft will be launched by a Titan IV ELV from Vandenberg Air Force Base (VAFB), California. It will operate in a sun-synchronous polar orbit at, or about, 98.2 degrees inclination, and will perform observations of Earth's biology, geology, and oceans; lower and upper atmospheric research and monitoring; solar observations; and plasma physics measurements. The platform will consists of a propulsion module, a primary carrier and supplemental carriers 44 feet long and 11 feet in diameter. A solar array will extend about 72 feet from the platform.

2. Columbus Polar Platform (Refer to Figure 2-3)

The platform, provided by ESA, will be launched from Kourou, French Guiana on an Ariane launch vehicle. It will be an unmanned free flyer in low-Earth, sun-synchronous orbit, primarily for Earth observation payloads. The reference configuration includes a propulsion module, a utilities and payload structure, a two-wing solar array, nickel-hydrogen batteries and radiators, and communications and tracking subsystems. Launch vehicle alternatives, servicing of the platform, and commonality with ESA's Free Flying Laboratory are currently being studied.

3. Columbus Free Flying Laboratory (Refer to Figure 2-3)

Launched by an Ariane 5 from Kourou, French Guiana into an orbit compatible with the manned base, the Free Flying Laboratory will be an unmanned pressurized laboratory for long-duration microgravity applications in fluid physics, life and materials sciences. The Free Flying Laboratory will consist of a two-segment pressurized module, identical to the Columbus Attached Laboratory and supported by an externally attached resource module providing power, communications and control. Attitude control will be maintained by liquid propellant and cold-gas thruster systems. Roll-out solar arrays and a deployable antenna will be attached. Servicing of the Free Flying Laboratory at the manned base is scheduled no earlier than one year after the completion of the manned base.

2.2.1.3 Assembly Sequence (Figure 2-10)

The FEL, scheduled for early 1995, will include part of the truss structure, a photovoltaic power module and an unpressurized docking system. The U.S. Laboratory Module will be launched in 1996, marking the beginning of Space Station Freedom's man-tended phase. During mid 1997, the Space Station will become permanently manned. The U.S. Polar Platform will be launched in late 1997.

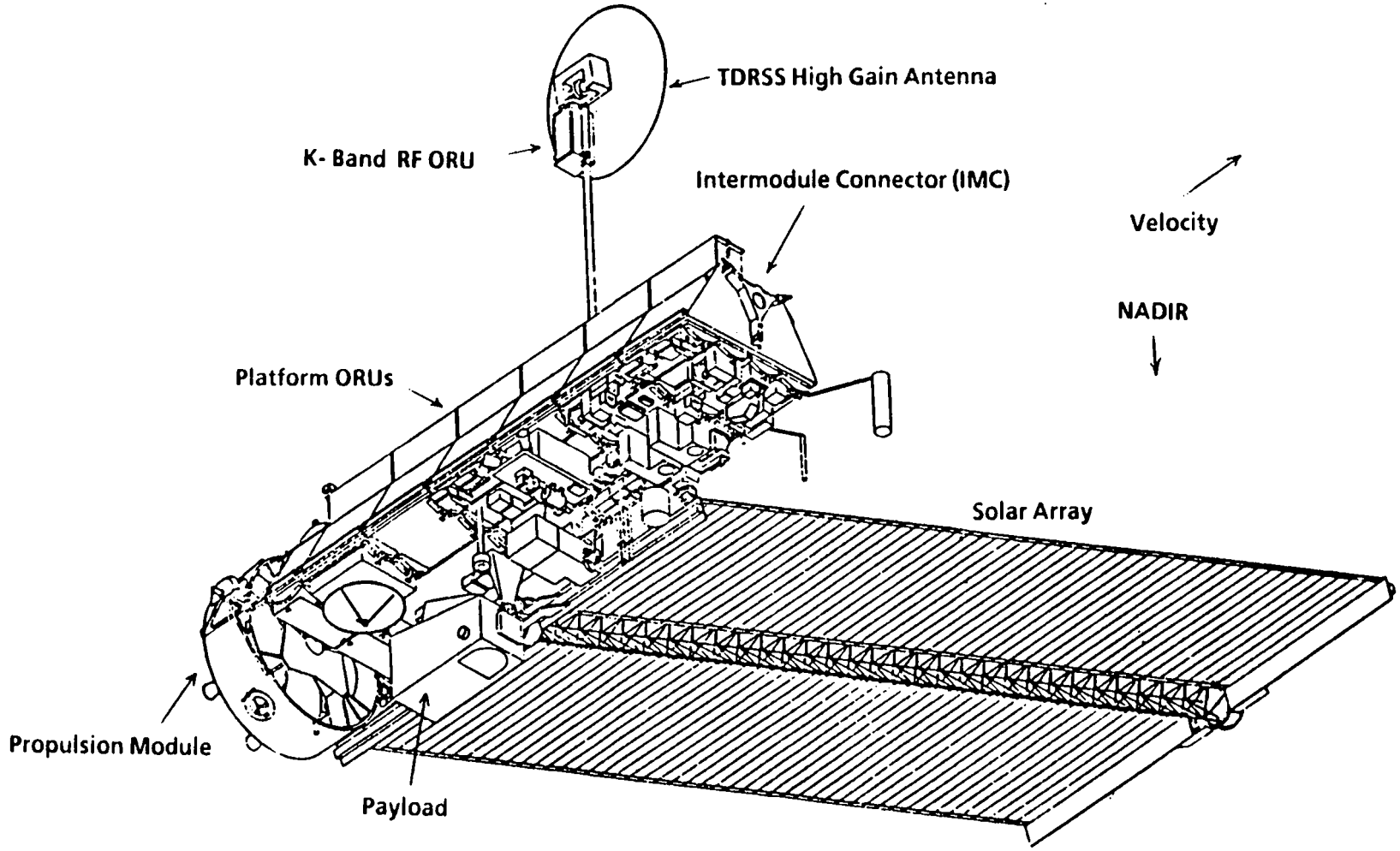

Figure 2-9 U.S. Polar Orbiting Platform (POP)

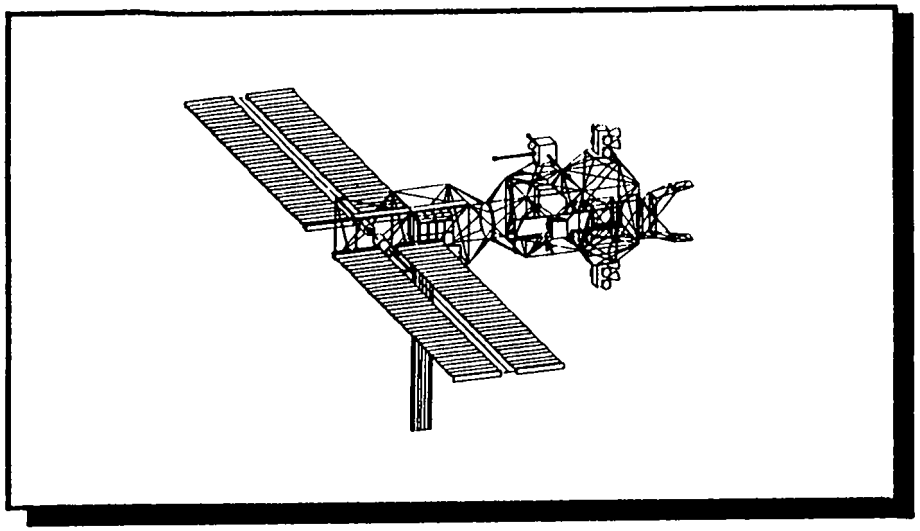

First Element Launch

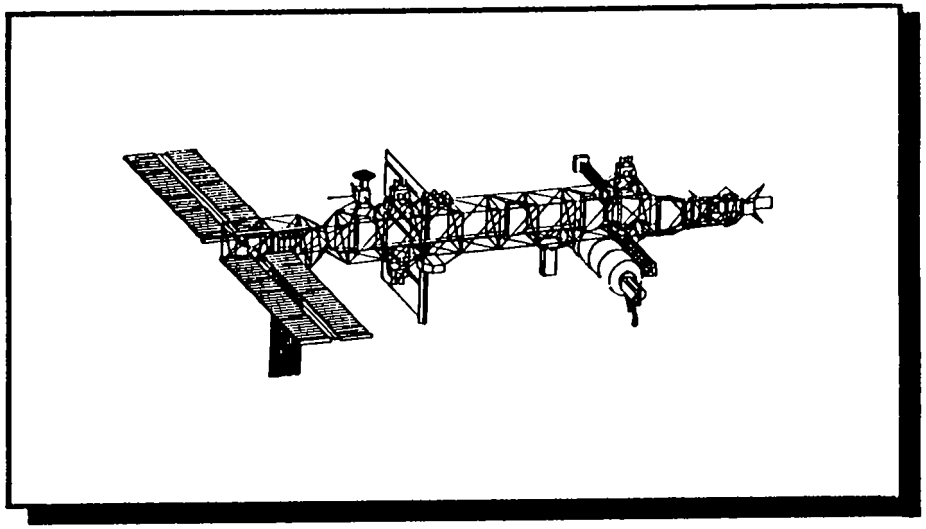

Man-Tended Capability

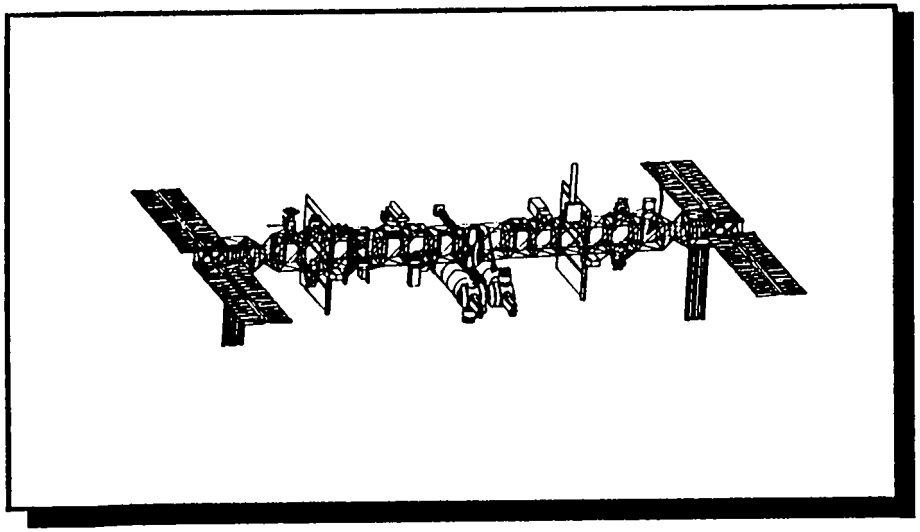

Permanently Manned Capability

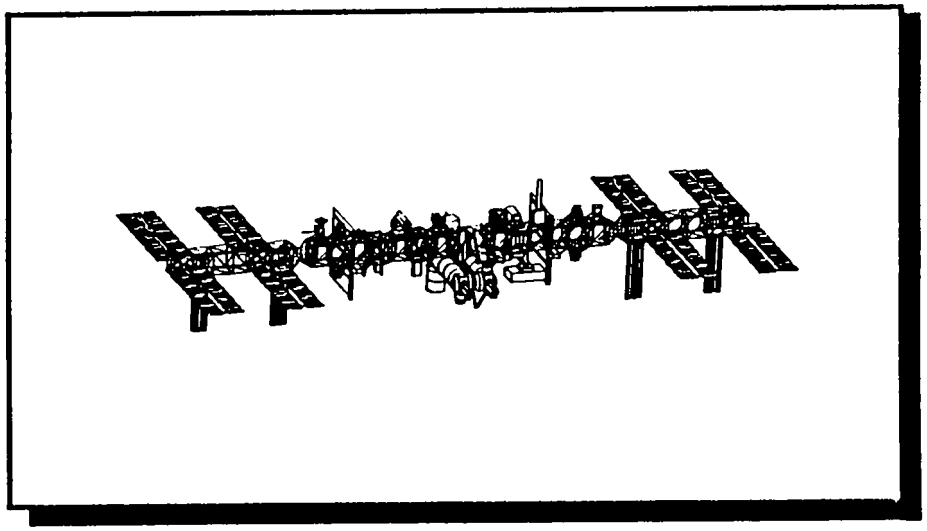

Assembly Complete

Figure 2-10 Assembly Sequence

During the same year, an Ariane 5 is scheduled to launch the ESA Polar Platform. The Space Shuttle will launch the JEM, the ESA Laboratory Module, and various logistics modules in 1998 and 1999. By late 1999, all the baseline elements and systems will be in place and assembly of the revised baseline configuration will be complete. This will be followed by a one year period of operations verification.

2.2.2 Space Station Freedom Development Plan

NASA is developing Space Station Freedom through a program office which has been assigned responsibility for program-level system engineering and integration of all systems and elements. The Station's flight hardware has been divided into four groups, designated Work Packages (WP), and assigned to four NASA centers called WP Centers. Figure 2-11 depicts the NASA Centers, and the principal contractors. Table 2-1 summarizes the WP contractors and their responsibilities.

The Space Station Freedom Program milestones are shown in Figure 2-12. The Program Requirements Review (PRR) occurred in the second quarter of 1988. Conducted as a combined review by Space Station program personnel, their development contractors, and the various Space Station user organizations, the requirements on the Baseline Configuration were refined during this two month process. Following PRR, NASA and the WP contractors initiated the preliminary design of Space Station Freedom's structure and systems. The design will be reviewed at the Preliminary Design Review (PDR) and again, two years later, at the Critical Design Review (CDR). The PDR is a technical review of the basic design approach for configuration items of the flight and ground systems. The PDR results in the authorization to proceed with further design in accordance with the reviewed design approach and interface requirements.

The CDR is a technical review of the program, conducted when the detailed design is approximately 90 percent complete. The purpose of the CDR is to determine the compliance with NASA requirements of the completed design and to assure that the detailed designs of flight and ground systems are in accordance with program requirements. The CDR results in the following: an approved set of engineering documentation which defines the design of selected configuration engineering items and authorizes the NASA projects to continue detailed design; the approval of test procedures; and, the appropriate revision or update of the Level III baseline configuration. The reviews are separated into two categories (MTC and PMC) to permit early review of the structure and systems which will be launched earlier in Space Station Freedom's assembly sequence. Consequently, any ramification of this EIS and its review process can be accommodated prior to the design being frozen.

Space Station Freedom's pressurized elements and subsystems will undergo tests and integration beginning in 1993. Initial tests will be performed at contractor locations and NASA WP Centers, with final test and integration to be accomplished at Kennedy Space Center (KSC) for the Station's manned base, at VAFB for the U.S. Polar Platform, and at ESA's launch site in Kourou, French Guiana for the Columbus Polar Platform and Free Flying Laboratory.

Space Station Freedom will be assembled over a four year period beginning in the first quarter of 1995 and ending in the third quarter of 1999. Space Station Freedom assembly will require twenty-nine Shuttle flights, a Titan IV ELV launch for the U.S. Polar Platform, and two ESA Ariane launches for the Columbus Polar Platform and

Figure 2-11 Geographical Distribution of Contractors

COMPANY	LOCATION	TYPE OF WORK
WORK PACKAGE 1		
Boeing Aerospace Co.	Huntsville, AL	Prime Contractor
Teledyne Brown Engineering	Huntsville, AL	Materials Processing Lab Outfitting, Payload Integration, Ground-Support Equipment
TRW, Inc.	Huntsville, AL	Systems Simulation and Training Software
Allied-Signal AiResearch	Torrance, CA	Thermal Control, Environmental Control, Life Support, Valves, Fire Detection, Technology Demonstrator
Lockheed Missles and Space Co.	Sunnyvale, CA	Life Sciences and Animal Research Facilities Outfitting
Hamilton Standard	Windsor Locks, CT	Urine Processor, Potable Water, Hygiene, Thermal, Technology Demonstrator
Arde	Norwood, NJ	ECLSS Tank Sets
Fairchild-Weston Systems	Syossett, NY	Internal Video
Astro International Corp.	League City, TX	ECLSS Processing Control Water Monitoring
Grumman Aerospace, Corp	Houston, TX	Design and Outfit Habitation Module
ILC Space Systems	Houston, TX	Galley, Laundry, Refrigerator, Trash, Storage
Life Systems	Cleveland, OH	CO_2 Reduction, O_2 Generator, Technology Demonstrator
Camus, Inc.	Houston , TX	Mockups, Trainers, Simulators, Flight Hardware
Harris Corp	Melbourne, Fl	Internal Audio
Perkin-Elmer	Pamona, CA	Atmosphere Composition Monitor
Ball Aerospace Co.	Boulder. CO	Fluid Subcarrier Tank Set
ILC Technology	Sunnyvale, CA	Interior Lighting
WORK PACKAGE 2		
McDonnell Douglas	Huntington Beach, CA	Prime Contractor
Motorola	AZ	
Sperry	AZ	
Astro Aerospace	Carpinteria, CA	Mobile Transporter (D&D)*
Emulex	CA	
Lockheed Missles & Space Co.	Sunnyvale, CA	Active Thermal Control System, EVA System, Rotary Mechanisms (D&D)*
Hamilton Standard	Windsor Locks, CT	
International Latex	Dover, DE	
Honeywell, Inc.	Clearwater, FL	Control System (D&D)*
McDonnell Douglas	Cape Canaveral, FL	Launch Integration and Support
Honeywell, Inc.	Minneapolis, MN	Ring Laser Gyro
McDonnell Douglas	St. Louis, MO	Corporate Support

* (D&D) = Design and Development

Table 2-1
Summary of Work Package Contractors

COMPANY	LOCATION	TYPE OF WORK
WORK PACKAGE 2 (Continued)		
General Electric	Camden, NJ	Communication & Tracking System
IBM	Owego, NY	Data Management System, Flight Hardware (D&D)*
IBM	Houston, TX	Data Management System (D&D)*
Lockheed	Houston, TX	EVA System
McDonnell Douglas	Houston, TX	Software Development Operations Planning, Flight Crew Integration, Airlock Testing
Eagle Technical Services, Inc.	Webster, TX	Systems Engineering
WORK PACKAGE 3		
General Electric Co.	Valley Forge, PA	Prime Contractor
Teledyne Systems	CA	
TRW	Redondo Beach, CA	
WORK PACKAGE 4		
Rockwell International Rocketdyne Div.	Conoga Park, CA	Prime Contractor: System Integrator PMAD, Software
Allied-Signal Aerospace Co.	Tempe, AZ	Closed Brayton cycle heat engine
Allied Signal Aerospace Co.	Torrance, CA	Solar Receiver
Ford Aerospace	Palo Alto, CA	Batteries, DC source PMAD, consolidated EEE parts
General Dynamics	San Diego, CA	20KHz converters
Lockheed Missles and Space Co.	Sunnyvale, CA	Solar arrays
Harris Corp.	Melbourne, FL	Solar dynamic collector structure
LTV	Arlington, TX	Deployable radiator for SD system
Spectrolab Inc.	Sylmar, CA	Solar cells
Applied Solar Energy Corp.	City of Industry, CA	Solar cells
Whittaker-Yardney Corp.	Pawcatuck, CT	Battery cells
Gates Corp	Gainesville, FL	Battery cells

* (D&D) = Design and Development

Table 2-1 (Continued)
Summary of Work Package Contractors

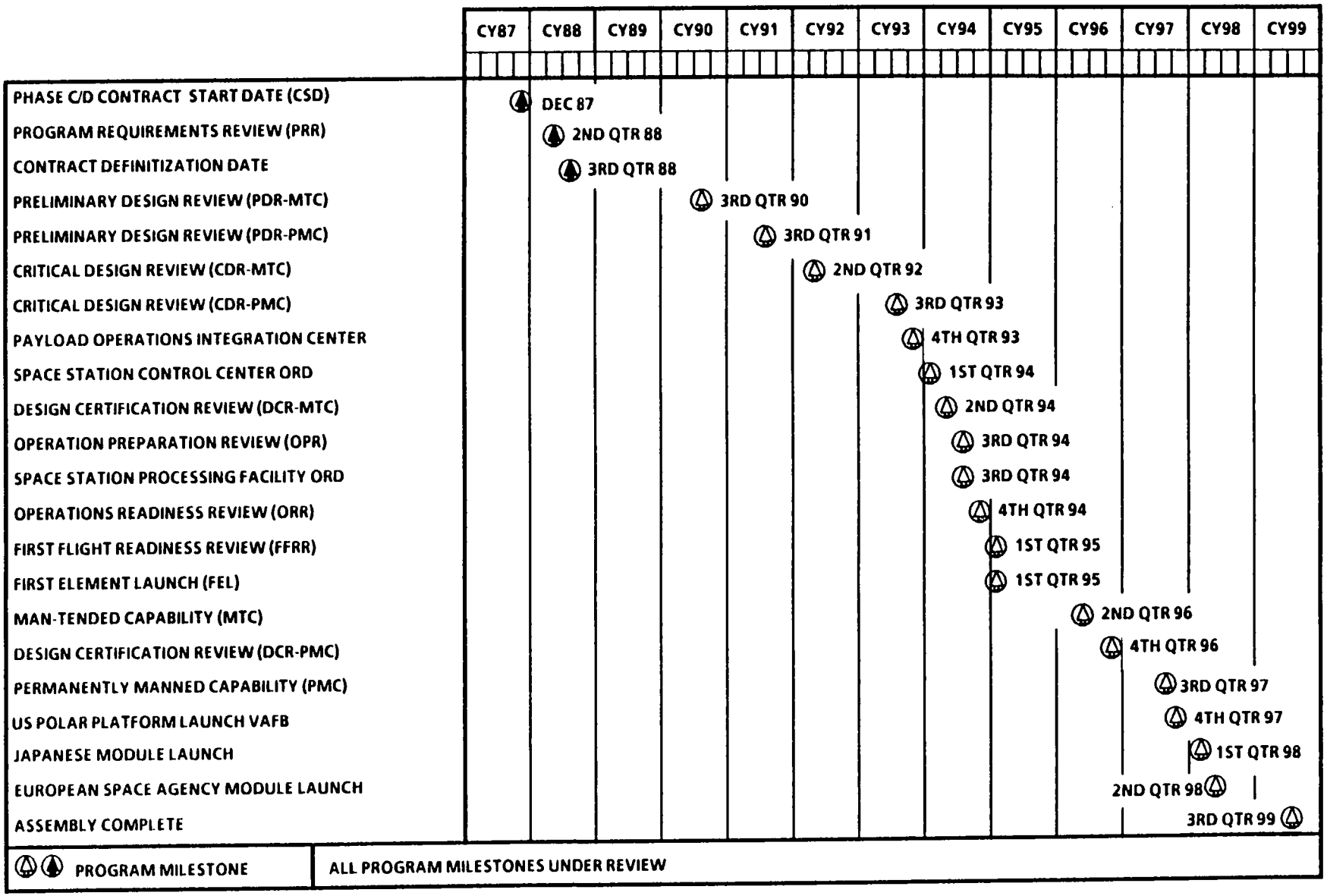

Figure 2-12 Space Station Freedom Program Milestones

OSS-11323
1/22/90

Free Flying Laboratory. Man-tended payload operation on the manned base will begin in early 1996 when the U.S. Laboratory Module is launched. Space Station Freedom will be permanently manned beginning in mid 1997.

2.2.3 Space Station Freedom Operation

Space Station Freedom manned base operations will be controlled from the Space Station Control Center (SSCC) at the Johnson Space Center (JSC). Logistics operations involving the manned base, including Station assembly, user outfitting, payload transportation, Station logistics, and waste return will be performed from KSC. The Shuttle is scheduled to visit the manned base approximately every 73 days, delivering replacement crew members, systems, supplies, consumables, and payloads. It will return with the relieved crew, payloads which have completed their operations, experiment products, and waste products. Shuttle flights will land at Edwards AFB, California, or at KSC, and the Shuttle will be unloaded at the landing site. With the exception of one Titan IV launch for the U.S. Polar Orbiting Platform, there are currently no plans to use expendable launch vehicles (ELVs) either in addition to, or in place of, the Shuttle. If a decision is made to employ ELVs for use with the manned base, it will be covered in the Tier 2 EIS.

Payload operations will be controlled from on board the manned base and from distributed locations across the U.S. and in participating countries. Operations may be performed in realtime when the Space Station elements are within range of space-to-ground communications systems or performed using automated programs. Payload activities on the manned base will be coordinated by the Payload Operations Integration Center (POIC) located at Marshall Space Flight Center (MSFC), on the U.S. Polar Platform by the Platform Support Center (PSC) located at Goddard Space Flight Center (GSFC), and on the Columbus POP and Free Flying Laboratory by a facility under the control of the European Space Operations Center.

Space Station Freedom manned base control and payload operations will be performed remotely (from the ground) during early Space Station assembly. When the manned base becomes permanently manned, these tasks will be performed primarily by the Station crew. The Space Station operation will be conducted around the clock on all Space Station elements. Figure 2-13 summarizes the categories of operations functions.

2.2.4 Decommissioning

Space Station Freedom is being designed for operation for an indefinite period of not less than 30 years. Since the Space Station is an investment by the U.S. in space infrastructure, it is expected that every attempt will be made to extend the useful lifetime of those facilities as long as those attempts are safe and practicable. NASA has been successful in using spacecraft far beyond their original design life, such as the International Ultraviolet Explorer and Voyager.

When it is determined that Space Station Freedom has reached the end of its useful life, NASA will disassemble the Space Station and return its components to Earth in the Shuttle. Space Station Freedom will be designed in modules which can be accommodated in the Shuttle's payload bay and will be designed for on-orbit assembly and disassembly. Plans for decommissioning of the Space Station are included in the initial design requirements, but are not yet sufficiently laid out to be described here.

FLIGHT HARDWARE AND SOFTWARE SUSTAINING ENGINEERING

- PRIME CONTRACTOR ENGINEERING SUPPORT
- IN-HOUSE ENGINEERING ANALYSIS AND SUPPORT
- MAINTENANCE AND OPERATIONS OF ENGINEERING DEVELOPMENT FACILITIES
- PRODUCT ASSURANCE

INTEGRATED LOGISTICS SUPPORT

- INITIAL AND REPLENISHMENT SPARES
- DEPOT REPAIR
- TRANSPORTATION
- WAREHOUSING
- SUPPORT EQUIPMENT
- TECHNICAL DOCUMENTATION

USER INTEGRATION AND SUPPORT

- USER INTEGRATION PLANNING
- LAUNCH SITE PAYLOAD PROCESSING
- USER / STATION OPERATIONS INTEGRATION

SUPPORT CENTER OPERATIONS

- OPERATIONS PREPARATION
- OPERATIONS FACILITIES MAINTENANCE AND OPERATIONS
- MISSION OPERATIONS
- TRAINING

PRELAUNCH / POSTLANDING OPERATIONS

- FLIGHT ELEMENT PROCESSING
- LOGISTICS ELEMENT PROCESSING
- FACILITIES MAINTENANCE AND OPERATIONS
- GDMS MAINTENANCE AND OPERATIONS

INFORMATION SYSTEMS SERVICES OPERATIONS

- TMIS MAINTENANCE AND OPERATIONS / UPGRADE
- SSE MAINTENANCE AND OPERATIONS / UPGRADE
- DATA SYSTEMS SERVICES (DSS)
- SSIS MAINTENANCE AND OPERATIONS

Figure 2-13 Space Station Freedom Operations Functions

2.3 DESCRIPTION OF THE POWER TOWER CONFIGURATION ALTERNATIVE

The Power Tower alternative would be similar to the Space Station Freedom Program in many respects. This configuration would fly in the same orbit as Space Station Freedom's planned orbit and it would be assembled in space over several Shuttle flights. This alternative would also include an unmanned co-orbiting platform. Each of these elements is described below.

2.3.1 Power Tower Manned Base

The Manned Base Power Tower configuration is shown in Figure 2-14. The Power Tower would operate in a Local Vertical-Local Horizontal (LVLH) orientation, with its keel along the local vertical direction and the solar array boom perpendicular to the orbit plane. The Earth-pointed end of the Power Tower would contain Earth-looking payloads. The zenith-pointed end would contain solar, stellar, and anti-Earth viewing payloads and communications antennas. Non-viewing payloads would be located at various places on the Power Tower and the pressurized modules would be located near the bottom of the keel. Servicing equipment would be located along the keel on either side, with the front and back surfaces of the keel kept free for traverse of the Mobile Remote Manipulator System (MRMS). The servicing, storage and equipment areas would be located at various places along the structure[5].

Gimbaled solar array wings would provide full power at any relative alignment of the Power Tower and sunline. Heat rejection would be provided by a combination of body-mounted radiators on the modules, deployed non-rotating radiators on the transverse boom, and deployed rotating radiators near the bottom of the keel.

The long, thin shape of the Power Tower would give it natural proclivity towards gravity-gradient attitude control. Aerodynamic forces and any unbalanced side-to-side masses would tend to cause a tilt of the keel off the nadir-zenith line, but the impact on the attitude control system would be minimized by maintaining reasonable side-to-side balance in mass distributions, and by allowing the keel to tilt slightly in the orbit plane, if required. Locations for attachment of large transient masses, such as the Shuttle and large space construction elements, have been selected to minimize impacts on the Attitude Control System (ACS)[5].

One of the principal advantages of this configuration would be the good viewing afforded to all payloads, both externally-mounted and internally-mounted.

Assembly would be accomplished using the Shuttle Remote Manipulator System (RMS) and the Power Tower MRMS after it is installed. Permanently manned operation could begin after launch 5.

Five pressurized modules would be utilized in the on-orbit configuration: two habitation modules, two laboratory modules and a logistics module. In addition, a second logistics module would be provided in the program, for on-orbit exchange with the first one, and to accomplish resupply every 90 days. Crew rotation or partial crew rotation would occur during resupply visits.

One laboratory module would be characterized as primarily a Life Sciences research module and the other as primarily a Materials Sciences research module. However, either module could be modified on-orbit to support other activities.

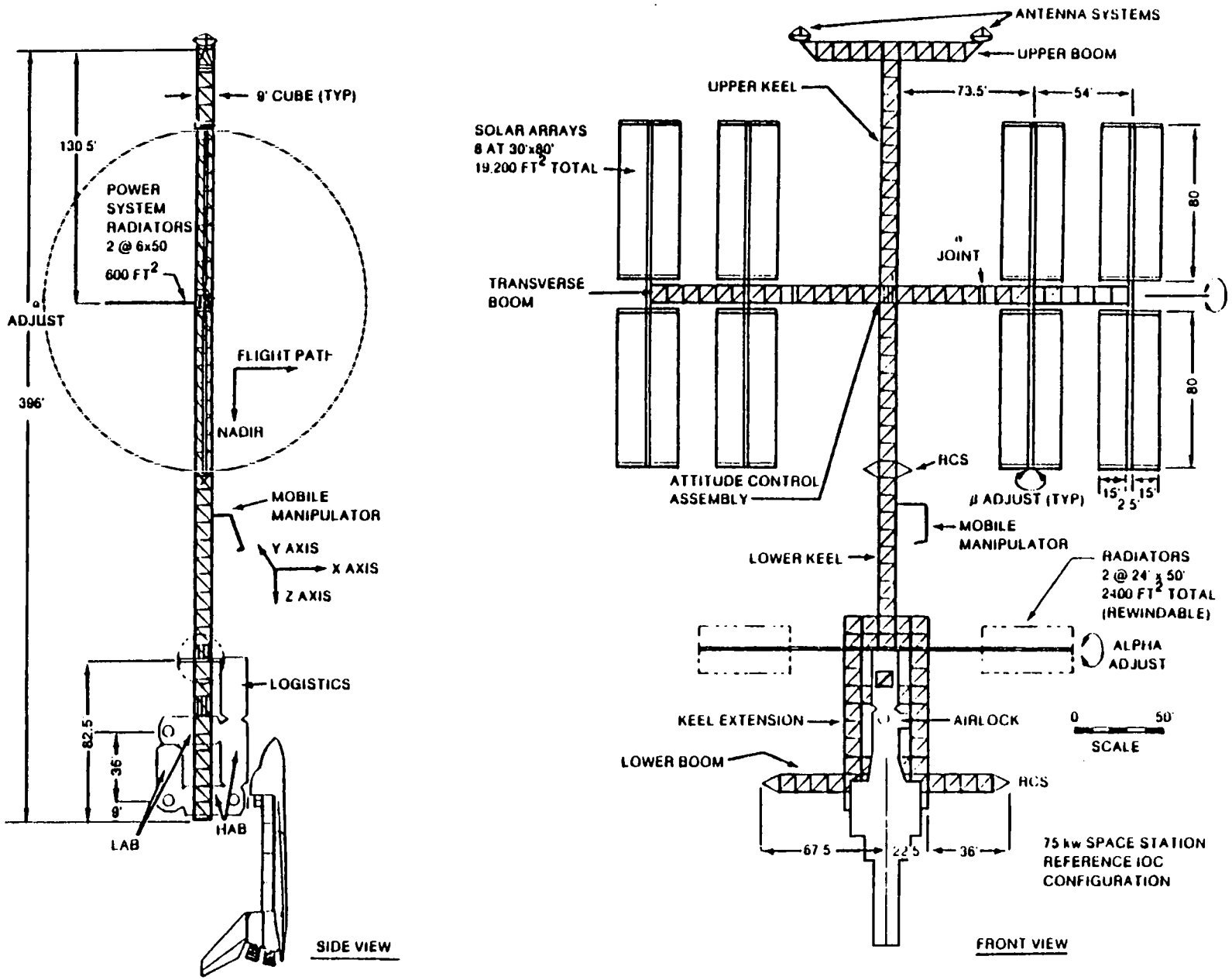

Figure 2-14 Power Tower Configuration

The Power Tower would meet the basic safety requirements of 1) operability and safety after the loss of any one module, 2) survivability of the crew for 22 days, and 3) rescue capability by providing safe exit from, and isolation of, any one module from the others and sufficient life support, food, waste management, control/communications, and rescue capability within the remaining three-module cluster[5].

2.3.2 Unmanned Platforms

The unmanned platforms would operate as complementary extensions of the Power Tower manned base capabilities. Their payloads would be composed of (1) a scientific instrument or a compatible set of instruments that have a similar field of investigation, (2) a technology development mission, or (3) commercial production units[5].

It is expected that the basic design should be common to the Polar and Co-Orbiting Platforms. The platform would have a near-hemispheric field of view in one direction. The field of view may be either inertial, for solar or astrophysics studies, or Earth oriented. Payload pointing control would be provided by the platform core itself, without payload gimbals, at an accuracy level suitable for most customers. The core would accept fine error signals from the instruments, if required, to meet their objectives.

The interface to the payload instruments attached to the platform would be standardized to be compatible with the instrument payload interface on the Power Tower. This would allow easy interchange of payloads on the platform. It would also permit convenient exchange of instrument payloads between the Power Tower manned base and the platforms.

The platform design would use Power Tower manned base elements to the maximum extent that is cost effective. The basic elements of the platforms would be modular and would incorporate standard interfaces to allow in-orbit servicing, repair, and upgrading. This modularity would permit growth of the platform capabilities while on-orbit to meet the increasing needs of future customers. The platforms would be sized to require only one Shuttle launch to place it in orbit with payload. This consideration limits the total platform launch weight into polar orbit.

The platform core for both platforms is illustrated in Figure 2-15. The backbone of the core would be a flat bed structure. It would provide the mechanical, electrical, and thermal interfaces to all core subsystems. These subsystems would be contained in ORU modules. A bulkhead would be mounted to one end of the flat bed. On the side of the bulkhead away from the flat bed, a truss structure would be deployed in orbit. This truss would be built of the same elements as the manned base would. This structure would carry the solar arrays and the propulsion thrusters.

In normal operations, the Polar Platform would be in a sun-synchronous orbit with a 2 p.m. descending node and a 2 a.m. ascending node. The + Z axis would be aligned with the local vertical (i.e., Earth-viewing), the y axis would be normal to the orbit plane (POP), and the + x axis would be aligned along the direction of flight. Reaction wheels would be the prime platform actuators to control all external disturbance torques. Magnetic torquers would be used for reaction wheel desaturation as resulting from the accrual of momentum due to secular disturbance torques[5].

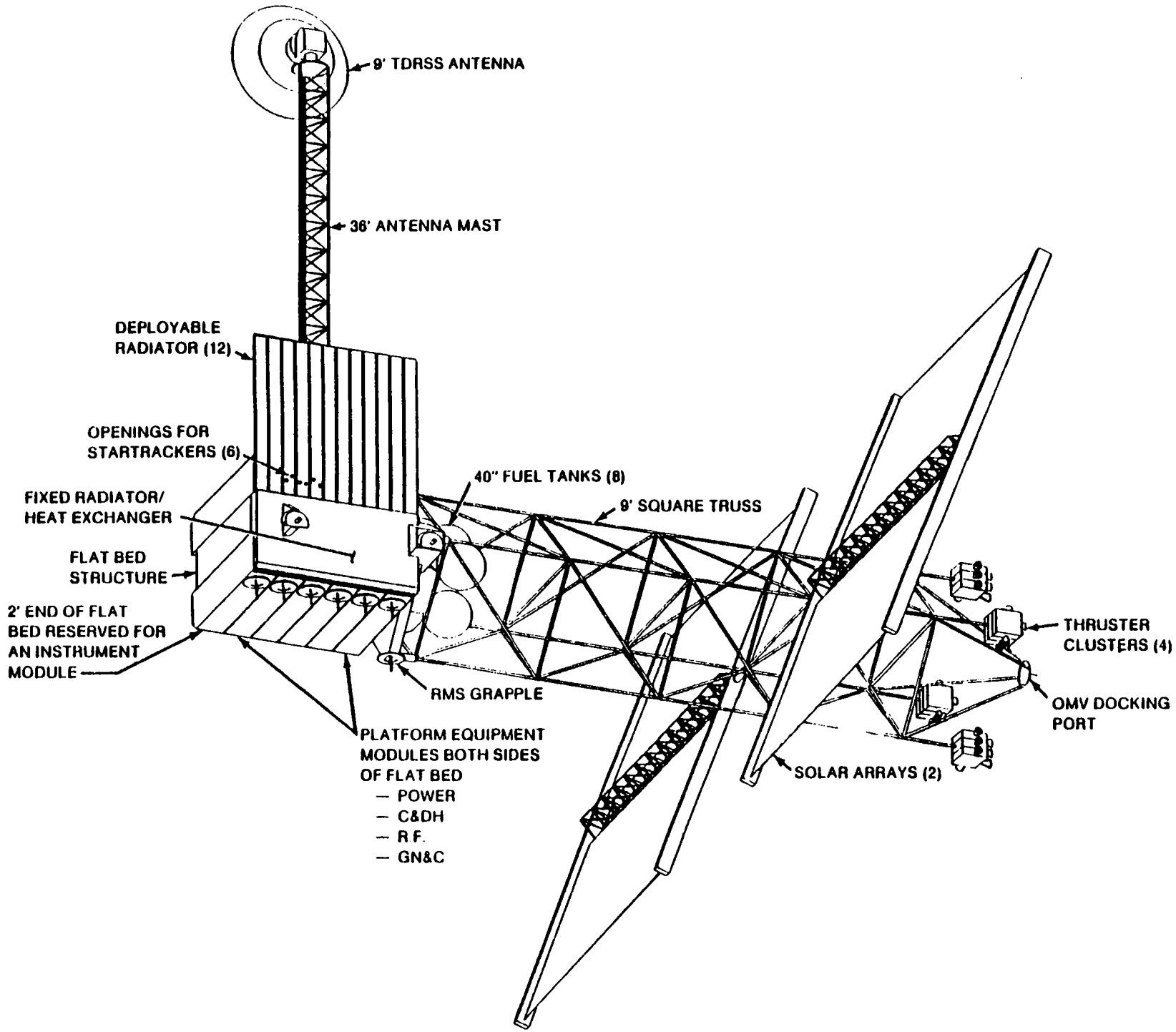

Figure 2-15 Core Platform (Without Payload)

The platforms would be launched in a fully configured mode (i.e., core with instruments). Therefore, the initial flight mode would remain unchanged throughout the platform's lifetime, notwithstanding the later enlargement of a platform by the addition of new instruments. The only occasion for an interruption in the normal flight mode would be during a servicing operations when the Polar Platform will be deboosted to a lower altitude for rendezvous with the Shuttle.

In normal operation, the COP would be flown at the same inclination as the Power Tower. The flight altitude would be the same as the manned base. The orientation would be in one of the two inertial modes, stellar or solar. The + axis would point inertially to the observation object in space. The y and z axes would be oriented, in conjunction with solar array rotation, such that the sun vector would be normal to the solar array[5].

The COP would be launched from the KSC and the Polar Platform would be launched from VAFB.

2.3.3 Rationale for Not Selecting the Power Tower Configuration

When compared to Space Station Freedom, the Power Tower configuration exhibited a major shortcoming in the area of payload accommodations. Many of the payloads planned for the Space Station will require a high level of microgravity (10^{-6}Gs). The Power Tower could not attain this level at the location of the pressurized modules. Relocation of these modules led to the configuration employed in Space Station Freedom. If the Power Tower configuration was selected, some of the payloads which rely on the microgravity environment could be placed on unmanned platforms. Other payload investigations, those requiring manned presence, would not be possible.

2.4 MAN-TENDED APPROACH (MTA)

2.4.1 Background

In appropriating funds for the definition of Space Station, Congress mandated in the 1985 NASA Appropriations Act (Public Law 98-371) that

> "NASA shall conduct a study of an option which 'phases-in' the permanently manned features of the Station, as one of the reference configurations to be examined in the definition studies."

The intent of Congress was to assure that, in the event that annual funding availability should dictate a major reduction in scope, the initial Station could accomplish useful work and would not be merely a habitation for the crew. In other words, if a reduction in scope were necessary, such reduction would not be solely at the expense of potential users of the Station.

This MTA was envisioned as a Station operating unmanned except for periodic visits by a crew to conduct short-term manned mission operations. After three to five years of man-tended operation, the man-tended facility would be phased into the permanently manned Space Station. During the man-tended phase, the Station would provide support for onboard user operations to the maximum extent possible[6].

While considered as an alternative approach, a man-tended station is not, programatically, a viable alternative because it is not capable of meeting major program objectives.

2.4.2 Configuration

The man-tended base would include four major discrete elements: the Man-Tended Multipurpose Laboratory (MML), an interconnecting node, an airlock, and a logistics system. This configuration would be very similar in appearance to the Space Station Freedom base except the MTA configuration would have only an MML, an airlock, and a logistics module. No Habitation Module, Columbus Module ,or JEM would be present, so the overall mass of a man-tended Station would be less than that of a permanently manned one.

The MML would be a pressurized module whose primary purpose would be to house user equipment and Station subsystems requiring a pressurized environment. For maximum versatility on the man-tended Station, the MML is envisioned as a multipurpose facility capable of accommodating some work in a variety of disciplines. It would be connected to a discipline dedicated laboratory when additional modules are launched and integrated.

The interconnecting node would serve as a mounting location for the airlock, logistics modules, and some specialized payloads as well as a docking port for the the Shuttle. One node would be included in the MTA, while four would be used in the permanently manned Station.

An airlock would provide a means of EVA during man-tended operations without isolating the MML from the Shuttle. It would use the same structural shell as the interconnecting node but would have only one berthing port and two hatches. As in the case of the node, the design would be the same as for the permanently manned Station.

The Logistics Module (LM) system would be used to transport consumables, spares, and equipment to the Station and to return products and waste materials to the Earth. It must provide both pressurized and unpressurized environments[6].

2.4.3 Rationale for Not Selecting the MTA

Although the MTA is technically feasible and would have little impact on the design of a permanently manned Station, it has several important disadvantages. Without human presence, faults or problems would not be able to be corrected in a timely manner. A minimum of fifty percent of the visiting crew's time would be required for Station maintenance, thereby drastically reducing the time available for user tasks. Morever, the life sciences research needed to enable long duration human spaceflight could not be carried out.

Figure 2-16 illustrates mission capture by the MTA relative to that for a PMC. Results are shown for various disciplines at manned visit frequencies of four and six flights per year. The capture is expected to be less than 50 percent for all disciplines and is as low as 20 percent. Long duration life science studies involving humans would not be possible. The data acquired from life sciences studies involving animals would be only a small fraction of that available with a permanent crew. Life science experiments involving plants and microbiology would be feasible and some may benefit from the reduced disturbance levels existing between manned visits. Estimated data return would be about 60 percent of that obtainable with the PMC.

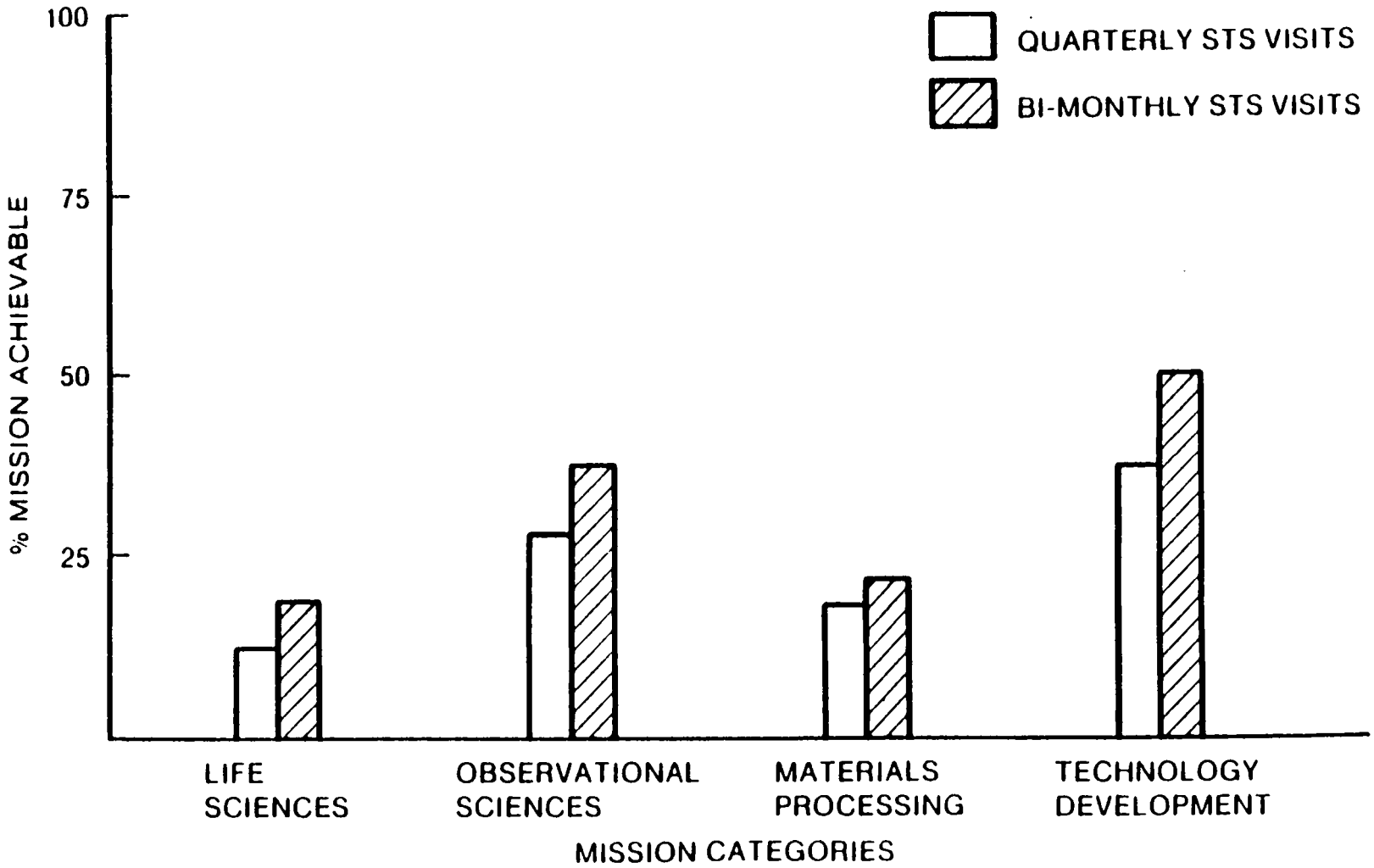

Figure 2-16 Man-Tended Approach Capture

Physics and chemistry research would be limited, being done primarily during manned visits.Technology development is typically manpower-intensive, requiring considerable time for setup, calibration, and readjustment. Many tests are of short duration and could be performed during manned visits. Some technology development missions are individually suitable for the MTA. However, data capture would be severely limited by the work time available during manned visits. Materials processing research and development require completion of a number of repetitive cycles; twelve days would be inadequate for many of these missions. Automation of the experiments for operation between visits would be beyond the state of the art anticipated for the early Station. Some of the work could be accomplished by state of the art teleoperation, although with greatly reduced productivity and with a greater likelihood of equipment breakdown.

It is estimated that about five percent of the current commercial interest in materials processing could be accommodated. The short periods of low gravity and the difficulty of maintaining the desired gravity level concurrent with other activities are the principal problems.

Onboard crew activity planning would not be performed. In other words, most of the flexibility of onboard operations afforded by the permanently manned Station would be lost, and more complex pre-mission and realtime planning would be required.

The formal agreements with our international partners covers their participation in a permanently manned Space Station. A decision to adopt the MTA could cause significant problems, jeopardizing current and future international cooperation in space activities.

2.5 NO ACTION ALTERNATIVE

Under this alternative, NASA would cancel the Space Station Freedom Program and fail to meet the presidential, and many of the scientific objectives outlined in Section 1.1.2.

The presidential objective of a permanently manned, multipurpose facility in low Earth orbit in the 1990's would not be achieved. The U.S. obligations under the international agreements to jointly develop a Space Station would not be met, failing to achieve the objective of enhanced international cooperation in space. Opportunities for private sector activity in space would be significantly reduced. Also, without the permanently manned Station there would be no way to flight-qualify humans for long duration spaceflight. Hence, U.S. manned exploration of the solar system would be dependent on what information we could obtain from the Soviets, the current world leaders in long duration human spaceflight.

Cancellation of Space Station Freedom would also severely impact U.S. and international scientific and commercial research plans. Some research, such as the effects of long term spaceflight on humans and microgravity research, requiring crew intervention, could not be conducted without a Space Station. Other experiments could be shifted to ELVs or to the Shuttle, but at an increased risk to mission objectives. ELVs cannot provide the payload servicing and repair opportunities of Space Station Freedom and do not provide the range of payload accommodations and resources capabilities which the payload complement requires. Some payloads could be flown onboard the Shuttle, but with reduced objectives. Others, which require longer periods of microgravity exposure, could not be done at all. The Shuttle, though manned, has a short mission duration and limited

accommodations and resources for payloads. Payloads could be flown on multiple Shuttle flights, but at a loss of efficiency compared to the Space Station and with greater transportation costs, since the same payload mass would need to be lifted into orbit more than once.

2.6 ENVIRONMENTAL CONSEQUENCES OF ALTERNATIVES

This section summarizes the environmental consequences of the proposed action, the Power Tower, the MTA, and the no action alternatives. A summary comparison of these alternatives is presented in Table 2-2. A detailed discussion of the environmental consequences of each alternative may be found in Section 4.0.

The impacts of the proposed action and the other alternatives have been divided into the three sections which follow: development and manufacture, normal operations, and unplanned return to Earth.

2.6.1 Development and Manufacture

2.6.1.1 Proposed Action

The development and manufacture of the U.S. provided Space Station Freedom components, payloads, and experimental devices will be conducted at existing ground based facilities. Some expansion of the existing facilities is expected, which will result in some construction activities that could effect the environment. These potential effects will be addressed in appropriate site specific environmental documents. The program will directly employ approximately 20,000 people during its peak (1992-94) period, and cause up to 30,000 related jobs to be created. The resulting overall economic impact will be positive, with appreciable local effects expected.

2.6.1.2 Power Tower

The Power Tower would produce virtually the same environmental impacts as the Space Station Freedom Program. Although the Power Tower would be a different design, the development and manufacturing techniques would be the same.

2.6.1.3 Man-Tended Approach (MTA)

The environmental impacts of the man-tended Space Station would also be similar to Space Station Freedom's impacts. Since the MTA does not include a habitation module, slightly fewer resources would be consumed in its development.

2.6.1.4 No Action Alternative

The no action alternative would eliminate the possibility of any potential impacts from construction of facilities associated with Space Station Freedom components. The loss of 50,000 jobs is not expected to be greatly significant nationwide because of the diversity of the work force, although local economic impacts would be significant in some areas. Cancellation costs from this alternative would be significant. United States and international scientific and commercial research plans would be canceled, as would payloads designed to monitor the Earth's environment.

CATEGORY	PROPOSED ACTION	POWER TOWER	MAN-TENDED APPROACH	NO ACTION
Earth Reentry	Low probability of property damage or human injury from catastrophic station event.	Low probability of property damage or human injury from catastrophic station event.	Low probability of property damage or human injury from catastrophic station event.	No impact.
Air Quality	Refer to Shuttle EIS for effects.	Refer to Shuttle EIS for effects.	Refer to Shuttle EIS for effects.	Refer to Shuttle EIS for effects.
Socioeconomics	Continued foundation for the overall economic health of existing aerospace-related industries which already tend to be major employment centers. Positive socioeconomic impact.	Continued foundation for the overall economic health of existing aerospace-related industries which already tend to be major employment centers. Positive socioeconomic impact.	Continued foundation for the overall economic health of existing aerospace-related industries which already tend to be major employment centers. Positive socioeconomicimpact.	Cancellation of existing development contracts. Negative socioeconomic impact or no impact.
Aquatic & Terrestrial Ecology	Minor impacts on communities where construction will occur.	Minor impacts on communities where construction will occur.	Minor impacts on communities where construction will occur.	No impact.
Water Quality	No significant impact. Refer to Shuttle EIS for Shuttle effects. Refer to NASA field center ERDs for localized effects.	No significant impact. Refer to Shuttle EIS for Shuttle effects. Refer to NASA field center ERDs for localized effects.	No significant impact. Refer to Shuttle EIS for Shuttle effects. Refer to NASA field center ERDs for localized effects.	Refer to Shuttle EIS for effects.
Noise	No significant impact from the space station. Short term, minor effect from construction activities. Refer to Shuttle EIS for Shuttle flight impact.	No significant impact from the space station. Short term, minor effect from construction activities. Refer to Shuttle EIS for Shuttle flight impact.	No significant impact from the space station. Short term, minor effect from construction activities. Refer to Shuttle EIS for Shuttle flight impact.	Refer to Shuttle EIS for Shuttle flight impact.
Transportation	No significant impact. All transportation accomplished by commercial carriers.	No significant impact. All transportation accomplished by commercial carriers.	No significant impact. All transportation accomplished by commercial carriers.	No significant impact. All transportation accomplished by commercial carriers.
Waste Disposal	No significant impact. All waste products returned and disposed of according to applicable regulations. KSC has facilities and permits to store, treat, & dispose of waste products.	No significant impact. All waste products returned and disposed of according to applicable regulations. KSC has facilities and permits to store, treat, & dispose of waste products.	No significant impact. All waste products returned and disposed of according to applicable regulations. KSC has facilities and permits to store, treat, & dispose of waste products.	No impact.
Historical, Archaeological, Cultural, and Natural Resources	No significant impact. Minor consumption of natural resources from hardware development and facilities construction. Refer to Shuttle EIS for Shuttle flight impacts.	No significant impact. Minor consumption of natural resources from hardware development and facilities construction. Refer to Shuttle EIS for Shuttle flight impacts.	No significant impact. Minor consumption of natural resources from hardware development and facilities construction. Refer to Shuttle EIS for Shuttle flight impacts.	Refer to Shuttle EIS for Shuttle flight impacts.

Table 2-2 Summary Comparison of Alternatives

2.6.2 Normal Operations

2.6.2.1 Proposed Action

In the normal operating mode, Space Station Freedom is not expected to produce major perturbations to the ionosphere during engine firings to reboost the Space Station to a higher orbit, and from venting, outgassing and leakage. All solid waste products and hazardous waste liquids and gases generated on-board the Space Station will be returned to Earth in sealed containers and disposed of in accordance with environmental regulations. The KSC has the facilities and the necessary permits and procedures to store, treat, and dispose of both hazardous and non-hazardous waste products. Removal of some waste products by controlled reentry and burnup in the atmosphere is a potential option but is not planned at this time. The impacts resulting from Space Shuttle launches have been discussed in the Shuttle EIS. The environmental impacts of a Titan IV launch of the U.S. POP have been discussed in the Environmental Assessment, Titan IV. No other impacts are anticipated due to the normal operation of Space Station Freedom.

2.6.2.2 Power Tower

The environmental effects of the Power Tower configuration would be virtually identical to those created by Space Station Freedom.

2.6.2.3 Man-Tended Approach (MTA)

The environmental effects of the MTA would be similar to Space Station Freedom, except that the quantity of crew-generated waste would be reduced because the crew would not live on the Station. Also, the absence of a habitation module would reduce the weight of the Station. Should the Station reenter, the debris would be less.

2.6.2.4 No Action Alternative

The no action alternative would eliminate any perturbations to the ionosphere due to Space Station Freedom but additional Shuttle launches, required to replace the lost experimental payload capabilities, would cause some minor disturbances to the ionosphere. There will be little difference between the proposed action and the no action alternative with respect to other environmental impacts, although the impact on scientific and technological opportunities is significant.

2.6.3 Unplanned Return to Earth

2.6.3.1 Proposed Action

The Space Station Freedom Program is taking numerous measures in the Space Station's design and operations planning to prevent an unplanned reentry of Space Station Freedom. In the unlikely event that such an event did occur, Space Station Freedom could execute a controlled or uncontrolled reentry. In a controlled reentry, Space Station Freedom would be directed to a fixed longitude and the resulting footprint would be minimized. Any effects to the environment from the debris would be localized and temporary. An uncontrolled reentry could produce a debris footprint at a random location within 28.5° North and South latitude. Reentry is clearly unacceptable and NASA is implementing a wide array of measures to avoid its occurrence. Section 4.1.1.2 discusses some of these measures.

2.6.3.2 Power Tower

The environmental impact of reentry of the Power Tower configuration would be similar to those created by Space Station Freedom.

2.6.3.3 Man-Tended Approach (MTA)

The man-tended Space Station would have impacts similar to Freedom's, with the possibility of a different reentry profile created by the slightly modified configuration.

2.6.3.4 No Action Alternative

The possibility of an unplanned return to Earth of the Space Station would not exist if the no action alternative were adopted.

2.6.4 Summary

The four alternatives (including the proposed action), discussed above, have very similar and minor impacts on the environment. The proposed action is superior to the other alternatives in satisfying the Space Station program's goals and has no significant environmental impact. Thus, it is the preferred alternative.

3.0 AFFECTED ENVIRONMENT

The following section describes the environments potentially affected by the Space Station Freedom program. They include portions of the Earth's atmosphere and the sites where the Space Station will be developed and operated.

3.1 THE ATMOSPHERE

The Earth's atmosphere is composed of several layers. The lowest layer is the troposphere which extends from the surface to approximately 10 km (5.5 n.m.). The next layer is the stratosphere which extends from approximately 10 km (5.5 n.m.) to 50 km (27.4 n.m.). The stratosphere contains the ozone layer which protects the Earth's population from dangerous ultraviolet radiation. The next layer is the mesosphere which extends from 50 to 80 km (27.4-44 n.m.). This is followed by the ionosphere which extends from 80 km (44 n.m.) to an indefinite height. The ionosphere contains several layers which are important in radio communications. Figure 3-1 depicts the atmospheric layers discussed above and the average operating altitude of the Space Station manned base 463 km (250 n.m.), and the apogee of the Polar Platform 705 km (380 n.m.).

There are, at present, some general areas of concern regarding man's impact on the existing atmospheric environment. These concerns will be discussed in the following sections.

3.1.1 The Troposphere

All Space Station Freedom earthbound activities will occur within the troposphere. These include manufacturing, test and integration, transportation, and prelaunch processing. Included in prelaunch processing are logistics operations which will provide for the procurement, storage, and handling of on-Station supplies including the hydrazine fuel. The transportation of personnel and logistics to and from the Station will be provided by the Shuttle which will launch and return through this layer. One ELV will lift the U.S. POP through the troposphere. Within the troposphere, there are two areas of concern: (1) air quality, and (2) the greenhouse effect.

3.1.1.1 Air Quality

The U.S. EPA, as a result of the Clean Air Act of 1970 and its 1977 amendments, has adopted national ambient air quality standards (NAAQS) for various pollutants, designed to protect human health and welfare. A summary of these standards is presented in Table 3-1. Since these standards are concerned with the protection of human life, they are applicable at the Earth's surface.

3.1.1.2 Greenhouse Effect

The Space Station is not expected to have any direct impact on the greenhouse effect. However, experiments to be conducted on the Space Station may contribute to knowledge about it. Short wave radiation from the sun is transmitted through the atmosphere to the surface where it heats the Earth-atmosphere system resulting in the emission of long wave (infrared) radiation. However, some of this outgoing infrared radiation is "trapped" by atmospheric constituents. This reduction in the long wave emission to space is referred to as the greenhouse effect. The most important radiatively active atmospheric constituents that contribute to this greenhouse effect are water vapor, carbon dioxide, and clouds. Together these

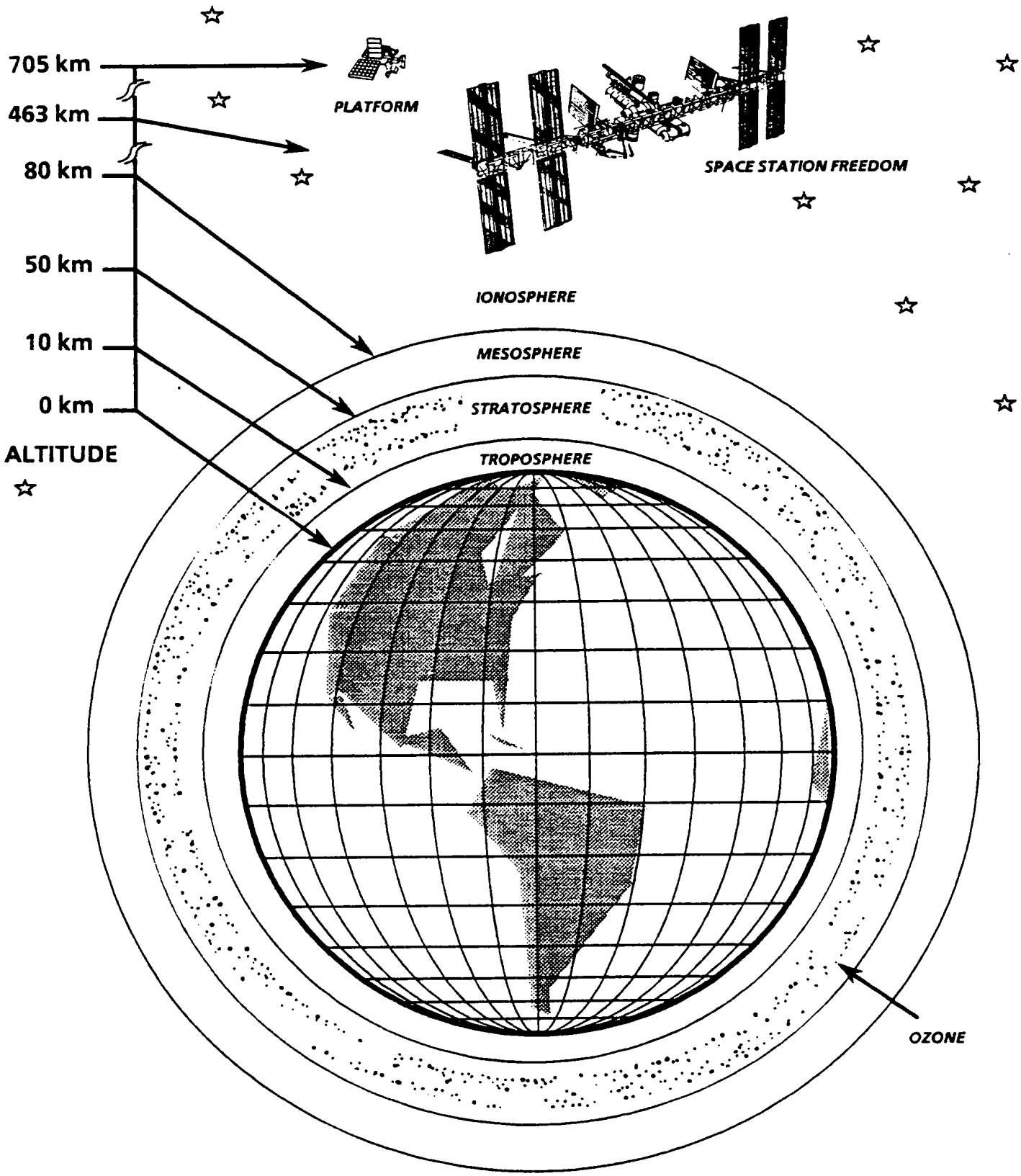

Figure 3-1 Locations of the Troposphere, Stratosphere, Mesosphere, and Ionosphere Atmospheric Layers and the Space Station Freedom

Table 3-1 National Ambient Air Quality Standards

AVERAGING PERIOD	PRIMARY STANDARD (µg/m³)	PRIMARY STANDARD (ppm)	SECONDARY STANDARD (µg/m³)	SECONDARY STANDARD (ppm)
Sulfur dioxide				
Annual arithmetic	80	0.03	None	
24-Hour[a]	365	0.14	None	
3-Hour[a]	None		1,300	0.5
Particulate matter				
Annual Geometric	75		60[b]	
24-Hour	260		150	
Carbon Monoxide				
8-Hour[a]	10,000	9	Same	
1-Hour[a]	40,000	35[c]	Same	
Ozone				
1-Hour[d]	235	0.12	Same	
Nitrogen dioxide				
Annual arithmetic	100	0.05	Same	
Lead				
Calendar quarter	1.5		Same	
Hydrocarbons				
3-Hour (6 to 9 a.m.)	160	0.24[e]	Same	

[a] Not to be exceeded more than once per year.

[b] The secondary standard of 60µg/m³ is a guide to be used in assessing implementation plans to achieve the 24-hour standard.

[c] Revision to 28,630µg/m³ and 25 ppm proposed 8/18/80.

[d] Standard attained when the expected number of days per calendar year with maximum hourly average concentrations above 235µg/m³ and 0.12 ppm is equal to one or less.

[e] Hydrocarbon 3-hour standard used only as a guide to develop plans for achieving ozone standard.

three constituents contribute roughly 90% of the total effect and the water vapor contribution is the largest. The remaining 10% is due to ozone (O_3), methane (CH_4) and nitrous oxide (N_2O)[7].

In recent years it has become apparent that there are other radiatively active trace gases, known as chlorofluorocarbons, which are playing an important role in the greenhouse effect. They have been increasing in the atmosphere and have long residence times in the air so that they can accumulate. There is concern that trace gases could have as much impact as CO_2 on future temperatures[7,8]. The greenhouse effect could result in global atmospheric warming which could result in glacial melting, rising sea levels (coastal flooding), and disruptions to the ecological balance.

3.1.2 The Stratosphere

The stratosphere is the region between approximately 10 and 50 km (5.5 n.m. - 26.4 n.m.) The most important feature of the stratosphere is the ozone layer. The highest concentrations of ozone are found at approximately 25 km (14 n.m.)[7].

Ozone is the only atmospheric constituent which effectively absorbs ultraviolet solar radiation from about 250 to 310 nanometers (nm), protecting plant and animal life from exposure to harmful radiation (UV-B). Moreover, since the absorbed solar energy is converted into thermal energy, the absorption of UV light by ozone constitutes the principal source of heat in the middle atmosphere and is therefore responsible for the existence of the stratosphere, a layer with a positive temperature gradient and a considerable static stability.

In the steady state, the ozone concentration will be determined by a balance between the rate of ozone destruction (from photolysis and reaction with atomic oxygen) and the rate of ozone production (from reaction of atomic and molecular oxygen). Catalytic cycles for ozone destruction are shown in the following example.

Ozone destruction:	$NO + O_3 \rightarrow NO_2 + O_2$
Catalyst regeneration:	$NO_2 + O \rightarrow NO + O_2$
Net reaction:	$O + O_3 \rightarrow 2O_2$

A number of chemical compounds (e.g., chlorine and bromine monoxide, and the hydroperoxyl radical) other than the nitrogen system just described can catalyze ozone destruction and decrease the steady-state ozone concentration.

Evidence indicates that the atmospheric concentrations of a number of the gases important in controlling atmospheric ozone and climate are increasing at a rapid rate on a global scale because of human activities. Such gases include nitrous oxide (N_2O), methane (CH_4), carbon tetrachloride (CCl_4), methyl chloroform (CH_3CCl_3), many chlorofluorocarbons (CFCs) and halons (bromine-containing compounds, e.g., $CBrF_3$, $CBrClF_2$). These gases are important sources of the stratospheric nitrogen, hydrogen, chlorine, and bromine species that are predicted to photochemically control the abundance of ozone. The increasing atmospheric concentration of carbon dioxide (CO_2) is also predicted to affect the abundance of stratospheric ozone, but indirectly, by modifying the temperature structure of the atmosphere and hence the rates of ozone destruction[9].

The possible long-term decrease in the ozone amount is therefore expected not only to increase the UV-B irradiance at the Earth's surface, but also to modify the thermal structure of the atmosphere with potential consequences on the general circulation and on the global and local climate of the Earth[7].

The Space Station will have an average operating altitude of 463 km (250 n.m.). The altitude can range between 278 km (150 n.m.) and 500 km (270 n.m.). The POP will be at an altitude of 705 km (380 n.m.). The upper boundary of the stratosphere is 50 km (27.4 n.m.). Thus, the Space Station will be approximately 413 km (227 n.m.) above the upper boundary of the stratosphere and the Polar Platform will be approximately 655 km (360 n.m.) above this boundary. However, the Shuttle will launch and return through the stratosphere and an ELV will lift the U.S. POP through this layer. The Shuttle is the baseline transportation mode between the Earth and the manned base. Expendable launch vehicles are not in the baseline, with one exception for the U.S. POP launch.

3.1.3 The Mesosphere

The mesosphere is the atmospheric layer between 50 and 80 km (27-44 n.m.) extending from the top of the stratosphere to the base of the ionosphere. The base of the mesosphere is characterized by a warm layer, which is produced by the absorption of solar ultraviolet energy by ozone. Although the concentration of ozone is greatest at lower stratospheric altitudes, there are production/destruction mechanisms at work in the lower mesosphere. The temperature profile then decreases with height reaching a minimum at the top of the mesosphere. The layer is an area of varied wind speeds and directions due to the occurrence of turbulence and atmospheric waves[10].

3.1.4 The Ionosphere

The ionosphere is the layer of the atmosphere characterized by high ion and electron density. It is composed of several regions which are particularly important to radio communications. The lowest clearly defined region is the E layer, occurring between 80 and 140 km. The F_1 region and the F_2 region occur in the general area between 140 and 1000 km, the F_2 region always being present and having the higher electron concentration. The maximum electron concentration occurs in the F_2 region around 300 km[11].

Above the maximum electron concentration in the F_2 region, the electron concentration decreases monotonically out to several Earth radii, where the Earth's magnetic field and the protonosphere (the outermost portion of the ionosphere) are terminated by the solar wind or interplanetary plasma[12]. The Space Station Freedom will orbit the Earth in this atmospheric layer. The Shuttle will pass through this layer en route to and from Space Station Freedom, and a Titan IV ELV will place the U.S. POP into orbit within this layer.

3.2 NATURAL RESOURCES

3.2.1 Energy Sources

The energy sources which will be used in the manufacture of, and by the Space Station include: solar energy, water and fossil fuels, all of which are readily available.

3.2.2 Rare Elements

The rare elements which may be used in the Space Station and a rough estimate of their quantities are: gold - 25 lbs; silver - 220 lbs; and titanium - 6,000 lbs[13].

3.3 SITE SPECIFIC ENVIRONMENT

This section is concerned with the primary Centers responsible for Space Station Freedom, including systems development and implementation, and launch activities. Future site specific decisions regarding the Space Station will be addressed in separate environmental documents. An inventory of all major ground-based developmental/operational facilities both existing and proposed, that are required to support the Space Station program is presented in Appendix C.

3.3.1 George C. Marshall Space Flight Center (MSFC) (Work Package 1)

The MSFC is a multidiscipline Center for the design and development of major space transportation systems, orbital systems, and scientific and applications payloads for space exploration. The MSFC occupies 1800 acres within Redstone Arsenal next to Huntsville, Alabama. For more information and greater detail, the MSFC has prepared an Environmental Resources Document (ERD) dated November 17, 1980[14].

3.3.1.1 Land Use

The MSFC is located in the southwest portion of Madison County, within Redstone Arsenal, which is bordered on the south by the Tennessee River, the City of Huntsville on the north and east, and the Huntsville/Decatur Jetport on the west. The Department of the Army controls 36,818 acres of Redstone and leases 1,841 to MSFC. About 4,075 acres of the Wheeler National Wildlife Refuge lie to the south and west of the MSFC. Half the acreage of MSFC is designated as test areas. About 250 acres are open areas, 100 acres set aside for recreation, and the rest under a conservation plan to reduce soil erosion from the rolling and steep hills.

3.3.1.2 Hydrology and Water Use

Surface water is abundant in Madison County and supplies the drinking and industrial water used at Redstone Arsenal and the MSFC. Domestic sewage is treated at the MSFC and discharged to Indian Creek. Certain areas, particularly the test area, use septic tanks and disposal fields for sewage treatment. Industrial wastewater, mostly from plating and other metal finishing processes, is treated in a lined lagoon of 3.5 million gallon capacity. Heavy metals are treated and removed to an approved off-facility landfill.

3.3.1.3 Air Resources

The MSFC is in a temperate climate with warm, humid summers and temperatures ranging from an average of 77°F in summer to 47°F in winter. Normally the area air quality is well below the NAAQS; nearby mountains to the south and west tend to create air pockets conducive to inversions and air stagnations. The average annual precipitation at MSFC is 52 inches.

3.3.1.4 Socioeconomic Factors

Huntsville, Alabama has a current population of 167,400. Approximately 128,300 of those residents are employed, with non-manufacturing firms (96,100 employees) being the largest employers in the city. Overall unemployment was estimated at 5.2% in July 1988. It had increased from 4.8% in May 1988.

3.3.1.5 Additional Factors

The MSFC maintains a list of endangered and threatened species from state and federal lists. Taking of listed species is prohibited on MSFC property. The Redstone Test Stand, Propulsion Structural Test Facility, the Saturn V Dynamic Test Stand and the Neutral Buoyancy Space Simulator are preserved as National Historic Landmarks.

3.3.2 Lyndon B. Johnson Space Center (JSC) (Work Package 2)

The JSC is located on a 1620-acre tract near Clear Lake in the southeastern portion of Harris County, Texas, between Houston and Galveston. The JSC is devoted to research and development activities related to manned spaceflight, including crew support, instrumentation, spacecraft structures, telemetry, communications and tracking. For more information and greater detail, the JSC has prepared an "Environmental Resources Document for the Lyndon B. Johnson Space Center" dated November 1980[15].

3.3.2.1 Land Use

The topography of the JSC site is typical of coastal plains along the Gulf of Mexico; the land is relatively flat and open, with oaks and pines growing along water courses. Near-surface soils at JSC consist mainly of high plasticity clays. Mission control, management, administration and crew training are clustered for efficiency in a central mall. Spacecraft shakers are remotely located, as are thermochemical test facilities, the anechoic chamber test facility and the antenna test facility.

3.3.2.2 Hydrology and Water Use

The primary source of water use at JSC is treated surface water supplied by the City of Houston, plus two wells for emergency use only. Domestic wastewater is transported by underground pipes to the Clear Lake Water Authority (CLWA) treatment plant. Photographic laboratory wastes and oil-water wastes from garage and shops are treated and disposed of by a licensed contractor approved by the state. Blowdown wastewater from cooling towers and the thermochemical test area are aerated and chemically treated at the JSC, before discharge to the CLWA plant under pollution control regulations.

3.3.2.3 Air Resources

The JSC is situated in an area of predominantly maritime climate with relatively high humidity. The mean daily maximum and minimum temperatures range between 92°F and 44°F. The average annual rainfall at the JSC is 46 inches. The average cleansing power of the atmosphere is usually effective in this flat terrain; ambient air quality is well within national primary and secondary standards set by the EPA. Natural gas is used at the JSC as the primary fuel.

3.3.2.4 Socioeconomic Factors

The population of Houston, Texas is 1,700,000. The economy in the Houston, Texas area has been depressed in recent years due to the economic problems in the petroleum industry. In June 1988, the unemployment rate for Houston was 7.7 percent.

3.3.2.5 Additional Factors

State-listed endangered species with possible occurrence at JSC include the red wolf, the American alligator, the Houston toad, and mostly migratory birds: the brown pelican, the southern bald eagle, the Arctic peregrine falcon, Attwaters prairie chicken, the interior least tern, and the red cockaded woodpecker. In compliance with requirements of federal agencies, JSC does not permit the taking of endangered species within the site. The Apollo Mission Control Center has been designated as a National Historic Landmark.

3.3.3 Goddard Space Flight Center (GSFC) (Work Package 3)

The GSFC is a diversified research and development laboratory in suburban Prince George's County, Maryland capable of conducting a full range of space science and application programs, including unmanned Earth-orbit scientific missions studying near-Earth space, solar system phenomena, astrophysics, and space communication. The GSFC published an ERD in 1980 and an update of that ERD in January of 1986[16].

3.3.3.1 Land Use

The GSFC is situated on a 1,121-acre site 15 miles from Washington, D.C. A developed campus-like portion contains more than 30 buildings; an undeveloped area of 400 acres contains remote testing sites. Erosion and sediment control policies reduce soil erosion at GSFC, and construction techniques divert, direct and control sediments in storm runoff. Solid wastes are dumped into the Prince George's County landfill. Hazardous chemical wastes are disposed of by a private contractor under pollution regulations.

3.3.3.2 Hydrology and Water Use

The GSFC obtains its drinking water from the Washington Suburban Sanitary Commission, about 135 million gallons per year. Rainwater drains into a 6-acre manmade lake in the northwest corner of the Center and then into Beaverdam Creek, a tributary of the Anacostia River. Wastewater, about 80 million gallons a year, is discharged into Western Branch Sewage Treatment Plant. Stormwater runoff is drained into on-site streams via a storm sewer-system.

3.3.3.3 Air Resources

The GSFC is located in a region with a humid temperature, semi-continental climate. Annual mean temperature is 50°F with annual precipitation at the GSFC averaging 45 inches. Mobile source pollutants in Prince George's County often exceed state and national standards.

3.3.3.4 Socioeconomic Factors

More than $568 million annually is distributed into the local economy by the GSFC in payroll, construction, operations, research and development, amounting to two percent of the jobs in Prince George's County. Employees are predominantly scientists, engineers, professional and technical workers.

3.3.3.5 Additional Factors

Nearly 200 species and subspecies of birds reside on the GSFC land, including several rare species. An occasional bald eagle is spotted during spring and summer months. The Spacecraft Magnetic Test Facility, is designated as a National Historic Landmark.

3.3.4 Lewis Research Center (LeRC) (Work Package 4)

The LeRC consists of two separate operations - the Cleveland site and Plum Brook Station. The Center is responsible for research in electric power generation for space vehicles, and aircraft propulsion systems. Management and development of the Atlas/Centaur and Titan/Centaur launch vehicles is another function of the Center. For more information and greater detail, LeRC has prepared an ERD dated May, 1983[17].

3.3.4.1 Land Use

The Cleveland site of the LeRC is located in the southeast corner of Cleveland, Ohio, adjacent to Cleveland Hopkins International Airport. The Center contains a total of 351 acres, and is bounded on the north by a mobile home park which is part of the Riveredge Township. The western boundary borders on Rocky River Reservation, which is part of the Cleveland Metropolitan Park System. The south edge of this site is adjacent to a residential area which makes up a portion of the City of Brook Park.

The land is generally flat, with the exception of Abram Creek. The steep, narrow valley of Abram Creek bisects the west side of the site. Elevations range from 760 feet above mean sea level at the eastern edge of the property to 660 feet at the valley floor of Abram Creek. The Plum Brook Station encompasses 6,500 acres in Erie County, Ohio. The site is located approximately four miles south of the City of Sandusky, and lies in Perkins and Oxford Townships. The area surrounding the Plum Brook Station is primarily rural and agricultural with low population density.

3.3.4.2 Hydrology and Water Use

Abram Creek which bisects the Cleveland site flows into the Rocky River. During low flow periods wastewater treatment plant effluent makes up nearly all the discharge of the Creek. Water quality is generally poor. The Rocky River has been classified by the Ohio EPA as a State and National Resource Water. Groundwater supplies some domestic users; however, the wells do not have significant yields. The water supply to the site is provided by the Cleveland Water Department from Lake Erie. The Cleveland Southerly Wastewater Treatment plan handles the sewage from the site.

The Plum Brook Station comprises the drainage area for 11 streams, 6 of which emanate from within the Station. In accordance with the station's NPDES permit, water quality monitoring of Ransom Brook, Plum Brook, and Kuebeler Ditch is maintained on a continual basis. Water quality in these streams is generally within the limits prescribed by the NPDES permit. Precipitation is the source for

groundwater in the area. The limestone beds underlying the site yield between 5 and 25 gallons per minute. Raw water and domestic water are two separate water systems at the Plum Brook Station. The station has its own raw water system, which is used for non-contact cooling, process water, and fire protection. The water supplied by this system is untreated Lake Erie water. The domestic water is used for personal needs, sanitary needs, heating system makeup, and steam generation and is provided by the Erie County Perkins - Margaretta Sewer and Water District. All sewage generated at the Plum Brook Station is treated on-site. This system includes a trickling filter plant, various sewers and lift stations, several package aeration plants, and septic tank-leach field systems.

3.3.4.3 Air Resources

Both the Cleveland site and the Plum Brook Station are in the same climatic regime-continental modified by Lake Erie. Monthly mean temperatures range from approximately 27°F in January to 74°F in July. Precipitation is evenly distributed throughout the year averaging about 35 inches per year. Snowfall varies significantly averaging 52 inches per year at the Cleveland site and 28 inches per year at Plum Brook Station. Air quality monitoring stations in the vicinity of the Cleveland site indicate federal and state ambient air quality standards are being met for sulfur dioxide, nitrogen dioxide, and total suspended particulates. The Plum Brook Station is located in an area of generally good air quality however, there has been some difficulty in Erie County in complying with the state standard for total suspended particulates.

3.3.4.4 Socioeconomic Factors

According to the 1980 Census, the total population of Cuyahoga County is 1,493,738. The Cleveland site employs approximately 2,500 full-time permanent employees. The permanent staff is composed of a wide range of professional disciplines in science and business, of which about 46 percent are engineers and scientists. Total employment at the Cleveland site represents approximately 0.3 percent of the total labor force (859,200) of Cuyahoga County.

The 1980 Census population for Erie County was 79.655. The number of personnel at the Plum Book Station varies between 50 and 300 including NASA, contractor, and seasonal employees.

The Cleveland area and Erie County experienced an economic crisis of major proportions in the early 1980s. The unemployment rate increased significantly and the size of the labor force decreased as people left the area to seek employment elsewhere.

3.3.4.5 Additional Factors

There are numerous endangered animal species that may occur at the Cleveland site. There are no threatened or endangered plants known to be located at the site. The one endangered vertebrate that could occur in the site is the peregrine falcon. Plum Brook Station is one of the few relatively undeveloped areas in the region and contains both wetlands and woodlands. The flora and fauna which might be found in these habitats are a characteristic of the northeastern United States. Some of these could be threatened or endangered. Taking of endangered species is prohibited on the LeRC property.

Indians occupied much of Erie County during the prehistoric period. There are approximately 133 archaeological sites of known historical significance lying outside the fence encircling the central area of Plum Brook Station. Numerous sites also probably exist within the fence. Three of the identified sites outside of the fence were previously placed on the Ohio Historical Society Register, and the remaining 130 in 1980 and 1981. The Rocket Engine Test Facility, the Zero Gravity Research Facility, and the Spacecraft Propulsion Research Facility are designated as National Historic Landmarks.

3.3.5 John F. Kennedy Space Center (KSC)

The KSC is located on approximately 140,000 acres on Merritt Island, Florida, in Brevard County. The KSC is the major NASA installation for launch operations and related programs in support of both manned and unmanned space missions. For more information and greater detail, the KSC has prepared an ERD dated November 1986[18] from which much of the following information is derived.

3.3.5.1 Land Use

Of the 140,000 acres at the KSC, 95 percent is underdeveloped land: uplands, wetlands, mosquito control impoundments and open water areas. NASA maintains operational control of 6,507 acres of the KSC, divided into three zones: a launch support area, a general support area and a launch impact zone which extends out into the Atlantic Ocean. The 6,655 acres of land north of Launch Complex 39 known as the Canaveral National Seashore is administered by the U.S. Fish and Wildlife Service (USFWS).

3.3.5.2 Hydrology and Water Use

Surface waters surrounding the KSC include portions of the Indian River, Banana River, Mosquito Lagoon and all of Banana Creek, which had connected Banana River and Indian River until 1964 when the KSC crawlerway was built. Surface water quality at the KSC is generally good. NASA, the USFWS and Brevard County maintain water facility monitoring stations within and at the KSC boundaries. Approximately 38 sites are sampled on a quarterly basis. The KSC receives its water supply from the local public supply utility. All discharges into groundwater at KSC are performed within Florida Department of Environmental Regulation standards.

3.3.5.3 Air Resources

The climate at the KSC is subtropical with short, mild winters and hot, humid summers but no discernible spring and fall seasons. Ambient air quality at the KSC is well within EPA's national primary and secondary standards. Temperature ranges from 40°F to 75°F in the winter and from 70°F to 95°F in the summer. Thunderstorms are frequent, May through September. All of Florida is susceptible to hurricanes, but more often in the Keys and panhandle. The average annual rainfall at the KSC is 45.2 inches.

3.3.5.4 Socioeconomic Factors

Approximately 18,000 people were employed at the KSC in 1989, about 13 percent *civil servants*[19]. Peak employment at the KSC was 26,000 in 1968, during the Apollo program. The local economy depends upon the health and activity of the KSC, the

largest employer in Brevard County. The visitors center, Spaceport USA, is second only to Disney World as the most frequented tourist site in the state.

3.3.5.5 Additional Factors

Endangered species in the KSC area include four species of turtle, the bald eagle, the wood stork, red-cockaded woodpecker; the Florida panther and the West Indian manatee.

3.3.6 Vandenberg Air Force Base (VAFB)

The VAFB occupies 98,400 acres along the south-central coast of California and is located approximately 140 miles north of Los Angeles. It is the launch base for the Titan IV ELV. In addition to the Titan program, the VAFB is a base of operations for testing of the Minuteman and Peacekeeper (MX) Intercontinental Ballistic Missiles (ICBMs) and space launch activities for the Scout, Delta, and Atlas space vehicle programs. The Department of the Air Force has prepared a Final Environmental Assessment for the Titan IV program dated February 1988[20], from which the following information is derived.

3.3.6.1 Land Use

The VAFB is located in the northern part of Santa Barbara County and comprises 5.6 percent of the land in the county. The land along the northern and eastern boundary is primarily open space and grazing land. The western and southern boundaries border the Pacific Ocean. A large portion of the VAFB is open space. A central area, referred to as the cantonment area, is dedicated to base support. An airfield is located a short distance northwest of the cantonment area. The remaining areas of the base are dedicated to missile launch facilities.

3.3.6.2 Hydrology and Water Use

Three major streams drain the VAFB - the Santa Ynez River, San Antonio Creek, and the Santa Maria River. Numerous smaller ephemeral and intermittent streams drain the steeper coastal canyon on the base. Groundwater quality is regarded as poor to medium with concentrations of Total Dissolved Solids (TDS), chloride, and iron exceeding drinking water standards. Surface water quality is also regarded as poor to medium with high concentrations of sodium chloride, iron, aluminum, and TDS. Most of the the VAFB water supply is pumped from groundwater sources via ten wells on base. In FY 1986, the VAFB purchased 9 percent of its water from the Park Water Company. Wastewater is transported to a treatment facility in Lompoc, at an on-site package sewage treatment plant, and a septic tank leach field system.

3.3.6.3 Air Resources

The climate is categorized as mediterranean. The annual average temperature is 55°F, and precipitation averages 12.7 inches. The widely varying terrain results in great variations in wind speed and direction. Coastal fog is common during the summer. In 1986, the VAFB exceeded the state ozone standard.

3.3.6.4 Socioeconomic Factors

The population of Santa Barbara County was estimated to be 332,700 in 1985. The VAFB has influenced population growth patterns in the county over the last 30 years.

The working population at the VAFB was 15,016 in 1986, an increase of more than 4,600 over the previous ten years.

3.3.6.5 Additional Factors

There are numerous endangered and threatened species which may occur in the VAFB area. These include the brown pelican, bald eagle, gray whale, and the unarmored threespine stickleback. Taking of endangered species is prohibited on the VAFB property.

There are more than 600 archaeological sites recorded within the boundaries of the VAFB. SLC-10, a Thor missile launch complex built in 1958, represents the early years of historic efforts to put a man in space, and has been declared a National Historic Landmark.

4.0 ENVIRONMENTAL CONSEQUENCES

This section addresses the potential environmental effects of the proposed action, as identified in the Space Station Freedom EIS scoping process, and as specified in the Council on Environmental Quality's regulations for environmental impact statements.

4.1 POTENTIALLY SIGNIFICANT IMPACTS

This section addresses the areas of concern which were identified during the scoping process, described in Section 1.5.

4.1.1 Space Station Reentry

It is possible, although it appears highly unlikely, that Space Station Freedom or some of its components could reenter the atmosphere following a number of planned or unplanned events such as: 1) the inability to supply the propellant necessary to stay in orbit; 2) collision with orbital debris or with the Shuttle; and 3) multiple major onboard system failures. Reentry of the Space Station is possible because aerodynamic drag on the spacecraft reduces its velocity, which could cause it to fall out of orbit unless it is reboosted periodically. The following section describes the possible causes for Space Station Freedom's reentry into the atmosphere and discusses the environmental impacts of various reentry scenarios. Reentry of the Space Station is clearly unacceptable and NASA is implementing a wide array of measures to avoid its occurrence. Section 4.1.1.2 explains these measures which will drastically reduce the risk of Space Station reentry.

4.1.1.1 Possible Causes of Space Station Freedom Reentry

The possible causes of Space Station Freedom reentry are:

1) Orbital Decay from Lack of Propellant

   The dominant mechanism affecting orbit lifetime and propellant requirements for the Space Station is aerodynamic drag. The drag force is directly proportional to atmospheric density. Unfortunately, very large uncertainties are associated with predictions of density due to the random nature of solar activity, which strongly influences density. Although the solar activity varies cyclically with an 11-year average period, the exact level of activity within the cycle cannot be predicted with precision far in advance. The orbit decay rate due to drag is also proportional to the ratio of the cross sectional area of the vehicle to its mass. Space Station Freedom will be the largest spacecraft ever assembled and it has a large cross sectional area, but it also has a large mass so that its orbit decay properties are not unusual. Major factors affecting atmospheric density and, thus, aerodynamic drag are explained below:

   Solar Flux Variations. The density distribution in the Earth's atmosphere is highly dependent on the amount of heat received from the Sun. The sun's ultraviolet radiation flux is the primary source of this heating, and its intensity is dependent upon solar conditions. In general, there are short term variations in the flux such as the daily or diurnal heating which creates a bulge in the atmosphere on the hemisphere of the Earth facing the sun, and there is a longer period of variation associated with the well known 11-year sunspot cycle.

In the years approaching a sunspot maximum, solar activity increases with subsequent increased atmospheric heating, thus causing an increase in density at higher altitudes. There are short term flux variations from day to day which are rather difficult to predict, but a smoothed average of solar flux over a period of several months shows a definite pattern that repeats with some degree of regularity.

Geomagnetic Index. Also affecting the atmospheric density distributions are geomagnetic storms which occur when clouds of charged particles collide with the Earth's magnetic field. These storms are correlated with the 11-year solar cycle, increasing in frequency and intensity toward a cycle maximum, but the exact mechanism by which they heat the atmosphere is not understood.

During the assembly phase, it is planned that the Space Station will be boosted by its onboard propulsion system to an altitude that results in the Station decaying to assembly altitude just in time for the next Shuttle rendezvous. The normal orbit maintenance strategy as shown in Figure 4-1 will provide Space Station Freedom with sufficient fuel to maintain orbit for 180 days following a Shuttle servicing (fuel replenishment) mission. Normally, servicing missions will occur approximately every 73 days.

2) Collision with Orbital Debris or the Shuttle

Space Station Freedom could execute a controlled or uncontrolled reentry into the Earth's atmosphere as a result of a collision with orbital debris. Orbital debris is the manmade component of the large particle/object environment. The natural component of this environment is meteoroids.

The natural meteoroid environment has historically been a design consideration for spacecraft. Meteoroids are part of the interplanetary environment and sweep through Earth's orbital space at an average speed of 20 km/s (~45,000 mph). At any one instant, a total of 200 kg (441 lbs) of meteoroid mass is within 2000 km (~1100 n.m.) of the Earth's surface. Most of this mass is concentrated in meteoroids with average diameters of 0.1 mm.

Within this same 2000 km (~1100 n.m.) above the Earth's surface, however, is an estimated 3,000,000 kg (~3300 tons) of manmade orbiting objects. These objects are mostly in high inclination orbits and sweep past one another at an average speed of 10 km/s (~22000 mph). Most of this mass is concentrated in objects larger than 10 cm (4 in) the lower size limit that is tracked by the U.S. Space Command radars. About 7000 objects are currently being tracked by the U.S. Space Command. Approximately 3000 of the 7000 trackable fragments are spent rocket stages, inactive payloads, and a few active payloads. A smaller amount of mass, about 40,000 kg (44 tons) comprises the remaining 4000 trackable fragments. Most of the objects in the latter class are the result of over 90 on-orbit satellite fragmentations. Recent ground telescope measurements of orbiting debris combined with analysis of hypervelocity impact pits on the returned surfaces of the Solar Max spacecraft indicate a total mass of about 1000 kg (1 ton) for orbital debris diameters of 1 cm ($<\frac{1}{2}$ inch) or smaller, and about 300 kg (700 lbs) for orbital debris diameters smaller than 1 mm. This distribution of mass and relative velocity is sufficient to cause the orbital debris environment to be more hazardous than the meteoroid environment to most spacecraft operating in Earth orbit below 2000 km (~1100 n.m.) altitude including the Space Station Freedom.[21]

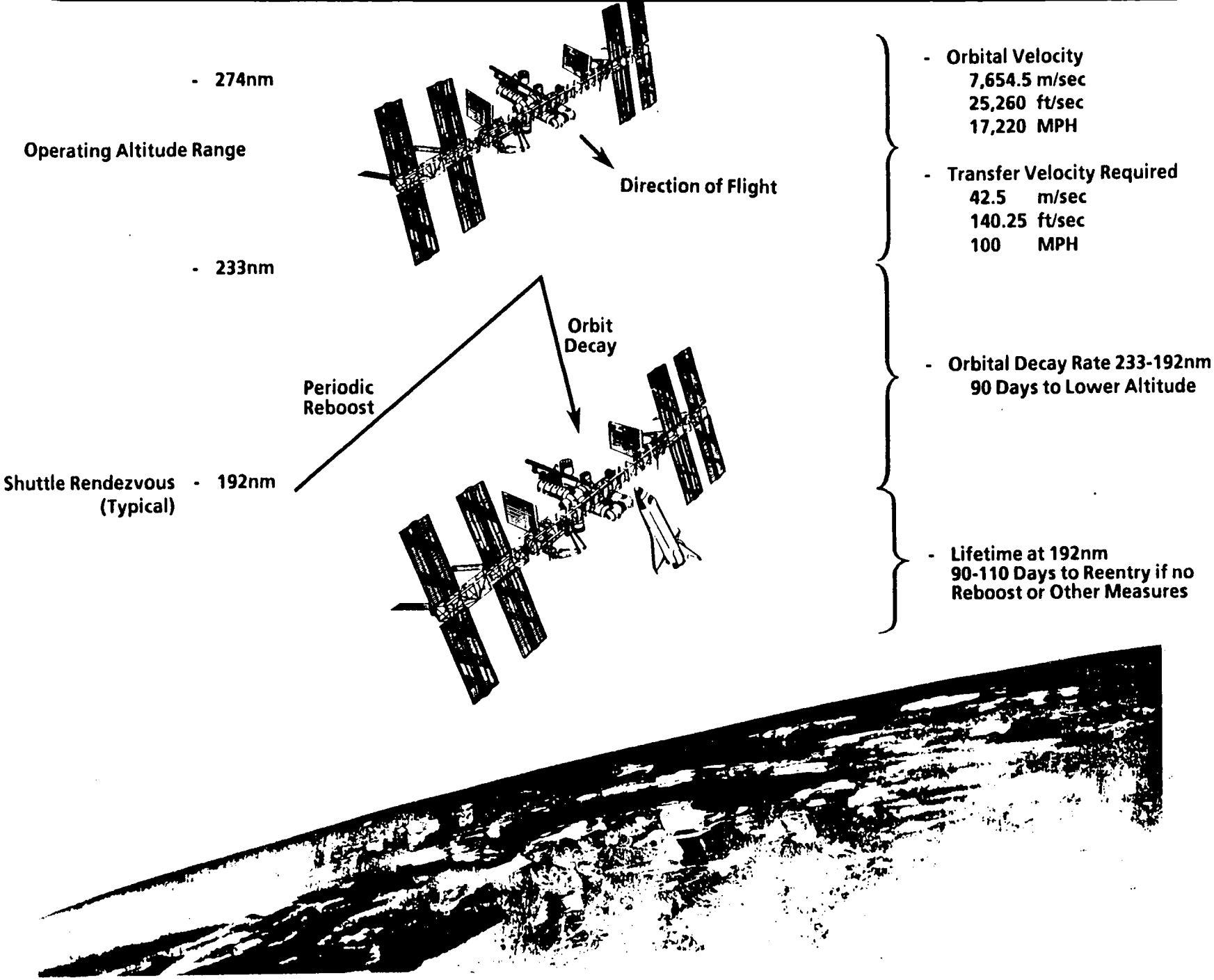

Figure 4-1 Space Station Orbit Maintenance Strategy

Orbital debris protection requirements as well as requirements for fault tolerant systems for Space Station Freedom have been developed to minimize the possibility that a collision with debris will result in a failure that will endanger Space Station Freedom's survivability. There is a remote possibility, however, that a collision with orbital debris or the shuttle will result in either a controlled or uncontrolled reentry. The controllability of the reentry depends upon whether the guidance and propulsion systems are lost during the collision. A controlled reentry is possible if the guidance and propulsion systems are operational after collision; in this case, it could enter the atmosphere over the ocean. If the guidance and propulsion systems are lost during collision with debris, an uncontrolled reentry would occur; in this case, it could theoretically reenter the atmosphere at any point in its orbit including over land and populated areas.

3) Multiple Major Onboard Systems Failures

Major systems failure also could result in either a controlled or uncontrolled reentry. Failures which leave the guidance and propulsion system operational would permit a controlled reentry. Failures which affect these systems could allow it to reenter uncontrolled before the systems could be repaired. Space Station Freedom's flight control systems will be designed and operated to allow continued operation in the event of multiple systems failures, practically eliminating probability of uncontrolled reentry in this situation. These measures are explained in greater detail below.

4.1.1.2 Measures Taken to Prevent Space Station Freedom Reentry

The Space Station Freedom program has taken several steps to reduce the probability of Space Station Freedom's reentry into the atmosphere. These measures fall into two broad categories, design requirements and operational procedures.

All systems in the Space Station Freedom program are given a criticality category. Criticality 1 systems are systems whose failure endangers crew safety and Space Station Flight Element (SSFE) survivability; these systems are two failure tolerant. Criticality 2 systems are systems whose failure endangers critical mission success; these systems are one failure tolerant. The remaining systems are categorized as Criticality 3, noncritical functions, and they are zero failure tolerant.

This will allow the Space Station to remain on orbit after experiencing two systems failures in each Criticality 1 system. The propulsion and guidance systems required to maintain the orbit are among these Criticality 1 systems. The required failure tolerance will be implemented through systems redundancy and physical separation of critical systems. The implementation of redundant systems will allow continued performance of each critical function should multiple failures occur. The physical separation of systems will reduce the probability of a single event (e.g., collision with orbital debris) disabling the redundant systems.

In addition to these provisions, Space Station Freedom's reliability and maintainability requirements further reduce the likelihood of failures resulting in reentry. All critical systems must have a minimum probability value of 0.9955 of experiencing no failure due to meteoroid and debris impact which would endanger its survivability.[22] Design requirements also direct that all critical systems be designed for on-orbit maintenance without interruption of the critical service. This

on-orbit maintenance capability will also allow for modifications or improvements to be implemented which enhance the reliability or capability of the Space Station.

Space Station Freedom's operational procedures will also reduce the probability of reentry. The Space Station will maintain a propellant reserve which will allow it to remain on orbit if a scheduled resupply flight is missed or if systems failures render the reboost system inoperative. If necessary, contingency procedures will be implemented to extend its orbital lifetime. These include "feathering" the solar arrays and changing the Space Station's attitude to reduce aerodynamic drag. These actions could extend the orbital lifetime by an additional 150-200 days.

4.1.1.3 Environmental Impact from Reentry

The Space Station will orbit the Earth at a 28.5 degree inclination with the equator. The ground track of this orbit will range between 28.5 degrees North and South latitude as shown in Figure 4-2. Because the Station is restricted to this orbit, any impact from reentry would occur within this latitude range.

Environmental impacts from Space Station Freedom reentry may be divided into two classes-those resulting from reentry of major components of the systems and those resulting from reentry of smaller pieces.

1) Reentry of Major Components

The environmental impact of Space Station Freedom's reentry depends on the nature of the reentry. The Space Station will be designed with an orbit maintenance system capable of providing control over reentry parameters. If this system is operational, its high drag profile and thrusters will allow the rapid reentry of the vehicle at a given longitude. An orbit could be selected well in advance which would place the splash footprint over water. No significant, lasting disruption of the marine environment would be expected and no loss of life or property anticipated, since warning would be given to maritime traffic in the area. Potentially hazardous fluids on Space Station Freedom could be released into the atmosphere, but the quantities (shown later in Table 4-3) are so small that only localized effects of short duration would occur. Release of the Station's hydrazine fuel into the atmosphere would result in like effects.

If the Space Station were to reenter uncontrolled, more significant environmental impact could result. Without sufficient propulsion capability for retrograde and/or attitude control, it could reenter the atmosphere at a shallower angle than otherwise would be the case. This would result in a splash footprint at a random location within 28.5 degrees North and South latitude. The Space Station Freedom program will conduct a study to quantify the hazards associated with the Space Station's reentry and to define any subsystem requirements to reduce potential hazards. The study will be conducted after sufficient detailed data about its design is generated and reviewed during the PDR process in 1990-1991. The results of the study will be incorporated into the Tier 2 EIS. The hazards analysis will estimate the amount and characteristics on any debris surviving to ground impact, develop de-orbit trajectories, define debris impact footprints, and supply human injury and property damage probability distribution for various reentry scenarios.

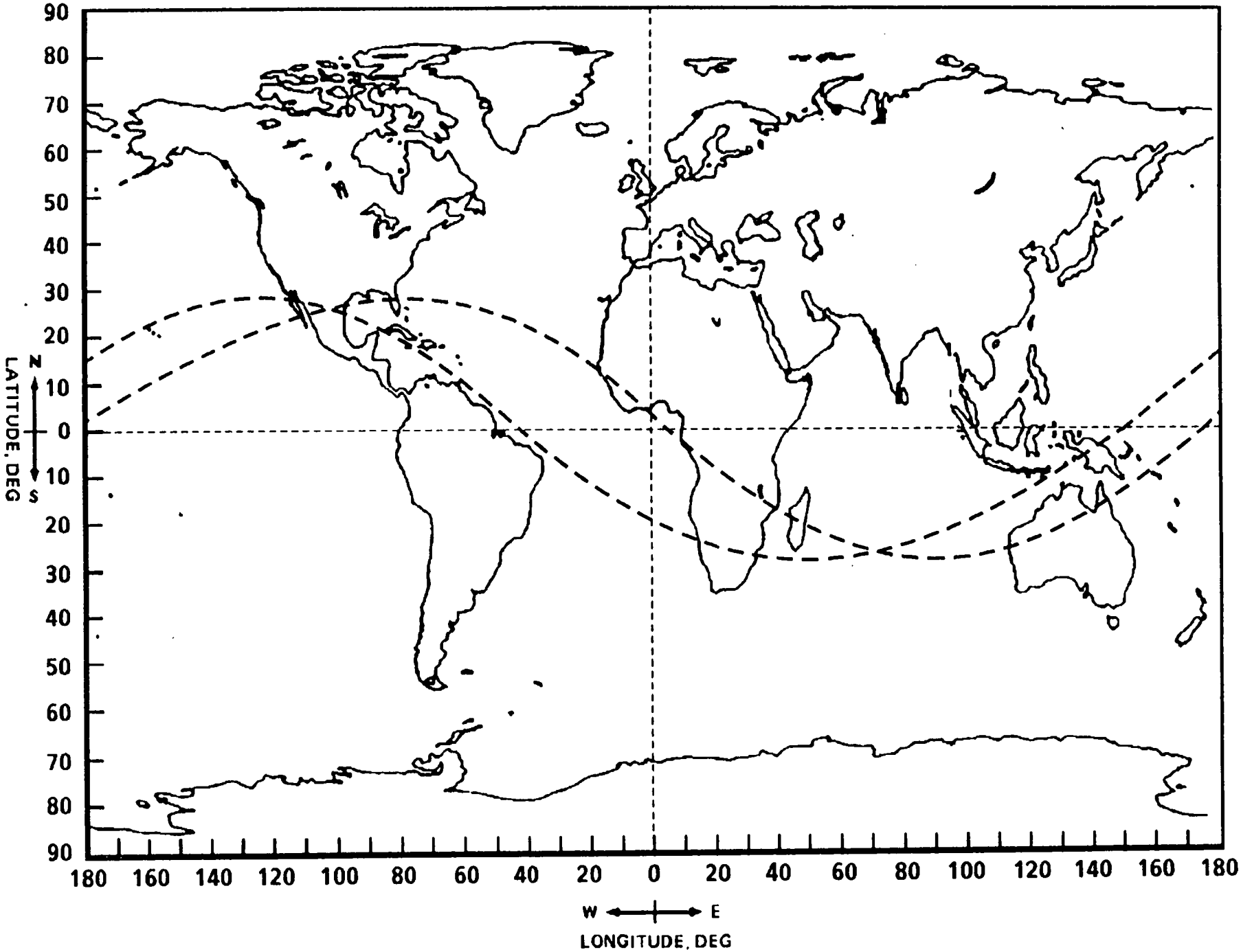

Figure 4-2 Plot of Two Space Station Freedom Ground Tracks

2) Reentry of Minor Debris

Minor collisions with orbital debris or the Shuttle or a minor explosion aboard the Station could conceivably result in some debris reentering the Earth's atmosphere. However, any debris which did reenter the atmosphere would almost certainly burn up.[23]

4.1.1.4 Incomplete and Unavailable Information

A complete reentry analysis is necessary in order to quantify the probabilities associated with the reentry hazard. The discussion in this section of accidental reentry has been limited to a qualitative analysis of the reasonably foreseeable adverse impacts on the human environment. This evaluation was based on information available at this stage of Space Station design.

As the Space Station Freedom development program progresses, the necessary data to perform a quantitative probability analysis will become available. The analyses will follow the PDR in 1991, when actual weight, assembly sequence, and other Station system characteristics are baselined. Until this information is known, any quantitative analysis would have to be based on extrapolations of previous spacecraft data.

Characteristics of reentry are strongly dependent upon the configuration. In considering how to approach a study of the reentry hazard, it was determined that an analysis based on extrapolated data would not be sufficiently accurate to merit the cost of the study, given that the analysis would have to be repeated for design purposes once actual Space Station configuration is finalized.

When the necessary data is available, analyses will be performed to:

1) assess the probability of reentry during assembly and operations;

2) assess breakup and identify reentry footprint;

3) identify the probabilities associated with Space Station debris striking a populated area;

4) to the degree possible, quantify the probability of a debris strike causing loss of life or property;

5) recommend subsystem design or operations changes, if necessary, to minimize probability of reentry and risk from reentering debris.

These efforts will ensure that the reentry risk is understood, adequate measures are taken to reduce reentry probabilities, and where necessary, that measures are taken to mitigate any unacceptable risk.

4.1.2 Space Station Freedom Decommissioning

The environmental impact of the Space Station's decommissioning would be limited to the effects of the Shuttle flights necessary to disassemble and return it to Earth. The environmental effects of Shuttle launches have been addressed in the Shuttle EIS[24], the Final Tier 2 EIS for the Galileo mission[25] and the Final Tier 2 EIS for the Ulysses mission[19].

4.1.3 Payload Operations

Payloads may contain radioactive tracer material of the type commonly used in life sciences research, for example. Other toxic substances associated with payloads will also be allowed onboard. The radioactive tracer material that is permitted onboard will conform to Occupational Safety and Health Administration and Nuclear Regulatory Commission regulations applicable to federal radiation workers. All radioactive material will be monitored while on board the Station and triply (or dual fault tolerant) contained. In addition, prior to permitting the radioactive material on the Station, studies will be performed to determine whether an accident involving a spill of the material can be cleaned up. If it cannot be cleaned up effectively without compromising Criticality 1 and 2 systems, it will not be allowed on the Station.

Toxic chemicals and other materials will also be permitted onboard, but they will not be permitted to come in direct contact with the crew. Triple (or dual fault tolerant) containment restrictions also apply to these materials, because exposure of these materials may endanger the crew, a Criticality 1 safety category. Two examples of such materials are acetonitrile and gallium arsenide; other examples are given in Tables 4-1, 2, and 3.

Because of the above precautions and the small quantities of radioactive or toxic materials involved, no significant environmental impacts are expected due to payload operations.

The KSC has facilities and procedures for handling hazardous materials. Hazardous and explosive materials have been used at the KSC for many years. Extensive procedures exist to prevent accidental releases and remedial capabilities also exist in the event of an accidental release. Therefore, the handling of potentially hazardous payloads for the Space Station program will not be a new or unique experience. There is no significant environmental impact expected during the handling of payloads.

4.1.4 Return and Disposal of Waste Material

4.1.4.1 U.S. Laboratory Module and Logistics Carriers

The U.S. Laboratory Module will house the experiments package for microgravity materials and life science research. Within the Laboratory Module, 20 double racks will be provided for user experiments and support equipment, and an additional 8 double racks will be provided for laboratory support equipment, such as gloveboxes, freezer, cameras and other equipment. Experiment packages installed within these racks will be exchanged with other packages during the lifetime of the Space Station. The experiments conducted within the Laboratory Module will require periodic resupply of consumables, and in turn will generate waste products, including excess consumables. These waste products will require containment and disposal, normally by return to Earth in the Shuttle.

The Laboratory Module will be delivered to orbit as a unit. The laboratory will be delivered only partially equipped due to Shuttle launch weight constraints. The additional equipment, experiments, and consumables for initial operational capability will be delivered on later flights. After achieving man-tended capability, the Laboratory Module will be serviced by additional logistics flights over the lifetime of the Space Station. Nominal reservicing will be at approximately 73 day intervals.

Top-level Space Station program requirements restrict the disposal of supplies, consumables, and wastes onboard Space Station Freedom. The relevant section states:

> Station Wastes. The Space Station program shall provide a capability for safe disposal of all manned base waste materials and products.
>
> Safe Deorbiting. No equipment, material, or consumables transported to the Space Station manned base shall be reconfigured, erected, or otherwise operated upon in a manner preventing it from being returned to a condition suitable for safe return to Earth or for a controlled and safe jettison.[26]

1) Materials from the U.S. Laboratory Module

The U.S. Laboratory Module's waste products may be divided into two categories: excess consumables and waste materials. Each category is discussed below:

Consumables. Consumables are those materials that will be initially and periodically brought to the U.S. Laboratory Module to supply and support the experiment packages in the module. Consumables delivery will nominally occur at 73-day intervals, but this period is not fixed at this time. Consumables will include inert and some toxic materials, in gaseous, liquid, and solid phase. Table 4-1 provides a summary of consumables carried to the U.S. Laboratory Module's Microgravity and Materials Processing Facility (MMPF) component during a typical resupply mission.[27] These consumables will be brought to the Space Station in pressurized and unpressurized logistics carriers via the Shuttle or expendable launch vehicles.

Waste Materials. Waste materials are those generated by the experiment packages in the Laboratory Module. Waste materials include waste from specific experiments and unused consumables no longer required. A summary table of wastes for a typical 90-day service interval from the MMPF is presented in Table 4-2.[27]

Among the waste materials produced in the laboratory module are some toxic wastes which have the potential for interacting with the environment under certain contingencies. For early experiment packages Table 4-3 is provided, indicating the typical type, mass, and volume of these toxic wastes.[28]

2) Processing of Laboratory Module Wastes

As seen in Table 4-2, wastes can be in solid, liquid, or gaseous phases. In accordance with directives of the Space Station Program Requirements Document and NASA policy, no solids will be released to space. Venting of some nonhazardous liquid and gaseous materials will be permitted. Unavoidable venting from leakage of the pressurized modules will also occur.

Solids, and retained liquids and gases will be returned to Earth for disposal at ground sites, or will be removed by controlled reentry and burnup in the atmosphere.

Table 4-1
Microgravity Materials Processing Facility (MMPF)
Summary of Sample Consumables

MATERIAL	MASS (kg/90 days)	VOLUME (Liters/90 days)	STATE	REMARKS
Acetonitrile	8.91	11.37	Liquid	
Acetylene	2.8 E-6	5.1 E-3	Gas	Volume at standard temp & pressure
Air	91.98	64,737.04	Gas	Volume at standard temp & pressure
Argon	52.05	32,169.1	Gas	Volume at standard temp & pressure
Cleaning Fluid	223.76	224.16	Liquid	Various fluids for various uses
Carbon Dioxide	2.80	1,856.04	Gas	Volume at standard temp & pressure
Water	2,027.25	2,027.25	Liquid	23.4% Distilled; 69.6% depyrogenized; 7% deionized
Hydrogen Gas	0.311	3,452.82	Gas	Volume at standard temp & pressure
Helium Gas	1.222	6,844.08	Gas	Volume at standard temp & pressure
Gloves	0.0034	0.0038	Solid	
Nitrogen Gas	170.814	136,649.4	Gas	Volume at standard temp & pressure
Oxygen Gas	23.672	16,545.44	Gas	Volume at standard temp & pressure
Lab Clothing	5.141	102.813	Solid	
Liquid He	45.88	367.052	Liquid	Shipped at 4.2° k
Liquid N2	507.7	774.41	Liquid	Shipped at 77° k
Methanol	8.909	11.37	Liquid	
Oil-cutting	7.4095	8.233	Liquid	
Test Tubes	16.033	319.79	Solid	
Wipes	8.45 E-4	1.11 E-3	Solid	
Gas Subtotal	342.822	262,216.2	Gas	Volume at standard temp & pressure
Liquid Subtotal	8,433.48	3,278.8	Liquid	
Solid Subtotal	21.18	422.60	Solid	
TOTAL	8,797.48	265,917.6		

Reference: MMPF Data Release Vol II A.

Table 4-2
Microgravity Materials Processing Facility (MMPF)
Summary of Sample Wastes

MATERIAL	MASS (kg/90 days)	VOLUME (Liters/90 days)	STATE	REMARKS
Acetonitrile	8.91	11.37	Gas	
Acetylene	2.8 E-6	5.1 E-3	Gas	
Acid	1.315	1.0523	Gas/Liquid	
Air	91.98	64,737.04	Gas	
Ampholyte	1.05	0.525	Gas/Liquid	
Ampoule Frag.	.02	0.197	Solid	
Argon	45.58	28,535	Liquid	
Cali. Solution	1.05	1.05	Liquid	
Cat. Solution	0.12	0.12	Gas/Liquid	
Cleaning Fluid	220.20	220.59	Gas/Liquid	
Carbon Dioxide	2.802	1,856.042	Gas	
Comb. Product	65.36	85,050.6	G/L/S	
Culture Med.	48.20	48.20	Liquid	
Water	2,025.5	2,025.5	Liquid	
Dielectric Fluid	17.59	14.07	Liquid	
Disinfectants	32.78	32.78	Gas/Liquid	
Fuel	.0038	.091	G/L/S	
Helium Gas	51.3	295,153.19	Gas	
Gloves	0.004	0.004	Solid	
Nitrogen Gas	326.94	269,684.1	Gas	
Oxygen Gas	0.58	410.6	Gas	
Growth Syr.	17.70	44.27	Solid	
High Vac. Wax	0.002	0.003	Solid	
Lab Clothing	5.141	102.813	Solid	
Methanol	8.909	11.37	Liquid	
Micro. Beads	1.1	2.18	Solid	
Oil-cutting	7.4	8.23	Liquid	
Protein sol	0.18	0.18	Gas/Liquid	
Quartz Tube	0.0443	0.0177	Solid	
Reactors	34.762	23.114	Solid	
Resirvior Sol	0.12	0.06	Gas/Liquid	
Seed Prod.	0.272	0.05	Solid	
Solvents	3.615	3.615	Gas/Liquid	
Staining Sol.	0.13	0.13	Gas/Liquid	
Test Tubes	16.03	319.78	Solid	
Wipes	0.001	0.001	Solid	
Gas Subtotal	78.34	3,895.01	Gas	
Liquid Subtotal	2,442.9	3,271.60	Liquid	
Solid Subtotal	868.17	965,855.6	Solid	
TOTAL	3,389.44	973,022.2		

Reference: MMPF Data Release Vol II A.

Table 4-3
Potential Laboratory Module Toxic Waste Products
(Per service interval, nominally 90 days)

EXPERIMENT	WASTE PRODUCT	kg/SI	Ltr/SI	PHASE	REMARKS
Acoustic Levitator	Water	8.0	8.0	L	
	Cleaning fluids	8.0	8.0	L	
	Wipes	0.02	1.3	S	
	Gloves	0.16	0.80	S	
	Melt vapors	0.01	0.02	G	
Alloy Solidification	Cleaning fluids	9.90	9.90	L	
	Metal particles	1.20	0.21	S	
Atmospheric Physics	TBD				
Autoignition Furnace	Selected gas	60.0	48000	G	
	Cleaning solvents	1.0	1.0	L	
	Water	10.0	10.0	L	
	Combustion products	TBD	TBD	G	
Bioreactor/incubator	TBD				
Bridgman, Large	TBD				
Bridgman, Small	Water	10.5	10.5	L	
	Boule fragments	0.85	0.15	S	
	Etchants	0.03	0.03	L	
	Cutting/polishing fluids	2.50	2.50	L	
	Wipes	0.03	1.63	S	
	Gloves	0.02	1.00	S	
	Sawblades	TBD	TBD	S	
Bulk Crystal	TBD				
Cont Flow Electrophoresis	Disinfectants	2.60	2.60	L	
Critical Point Phenomena	Cleaning solution	0.06	0.06	L	
	Sample material	10.56	3.0	L	
	Wipes	0.02	0.98	S	
	Gloves	0.24	1.20	S	
Droplet/Spray Burning	TBD				
Electroepitaxy	Arsenic	0.70	0.70	G	
	Boule fragments	0.17	0.14	S	
	Lab clothing etc.	7.0	294.0	S	
	Etchants	0.0	0.0	L	
	Gallium arsenide	0.88	0.88	S	
	Gallium	0.35	0.70	G	
	Polishing solution	7.0	7.0	L	
Electrostatic Levitator	TBD				
EM Levitator	TBD				
Float Zone	TBD				
Fluid Physics	Cleaning solution	0.6	0.6	L	
	Water	138.0	138.0	L	
	Solvents	1.50	1.50	L	
Free Float	TBD				
High Temp Furnace	TBD				

Reference: OSSA Space Station Waste Inventory Nov 86
(1 of 2)

Table 4-3
Potential Laboratory Module Toxic Waste Products
(Per service interval, nominally 90 days)

EXPERIMENT	WASTE PRODUCT	kg/SI	Ltr/SI	PHASE	REMARKS
Isoelectric Focusing	TBD				
Latex Reactor	Cleaning fluids	0.06	0.06	L	
	Initiator	0.01	0.01	S	
	Styrene	0.01	0.01	L	
Membrane Productions	Cleaning fluids	2.28	1800	G	
	Water	2.50	2.50	L	
	Monomer solutions	0.01	0.01	L	
	Wipes	0.01	0.81	S	
	Gloves	0.02	1.00	S	
Optical Fiber Pulling	TBD				
Org & Poly Crystal Growth	Cleaning fluids	0.13	0.13	L	
	Water	52.0	52.0	L	
	Solvents	26.0	26.0	L	
	Melt vapors	0.0	0.01	G	
	Wipes	0.01	1.27	S	
	Gloves	0.52	2.60	S	
Premixed Gas Combustion	TBD				
Protein Crystal Growth	Water	4.9	4.90	L	
	Disinfectants	0.35	0.35	L	
	Wipes	0.04	2.28	S	
Rotating Spherical Convect	TBD				
Solid Surface Bruning	TBD				
Solution Crystal	Water	230.1	230.1	L	
	Nitrogen	5.85	4693.0	L	
	Sodium aluminate	11.96	11.96	L	
	Sodium chlorate	5.07	5.07	L	
	Sodium hydroxide	1.95	1.95	L	
	Cleaning solutions	26.00	26.00	L	
	Solvents	3.25	3.25	L	
	Xray film developer	TBD	TBD	L	
	Xray film fixer	TBD	TBD	L	
Surf	TBD				
Vapor Crystal	Etchants	0.40	0.40	L	
	Polishing solutions	40.0	40.0	L	
	Transport agent	2.90	200.0	G	
	Boule fragments	35.0	3.50	S	
Variable Flow Shell Gener.	TBD				

Reference: OSSA Space Station Waste Inventory Nov 86
(2 of 2)

The KSC has in existence solid and hazardous waste management programs. The disposal, management, and recovery of nonhazardous wastes at KSC is accomplished by landfill, incineration, and recycling.

In compliance with the provisions of the RCRA of 1976, and the implementing regulations adopted by the State of Florida (17.30 F.A.C.) NASA has developed a program of managing and handling hazardous and controlled wastes at the KSC.

The organizational and procedural requirements of the KSC hazardous waste management program are contained in KHB 8800.7 "Hazardous Waste Management." This manual and supporting documents clearly delineate the procedures and methods to obtain/provide hazardous waste support, establish approved operations and maintenance instructions, and provide instructions to maximize resource recovery and minimize costs.

The control of hazardous materials at KSC is assigned to the Waste Management Authority (WMA). The WMA functions to direct and document relevant actions for hazardous or controlled waste handling, sampling, staging, storage, transportation, treatment, and disposal/recovery for compliance with all local, state, and federal regulations. A Technical Advisory Committee consisting of assigned representatives of the KSC legal, design, medical, and safety organizations provide support in the development and review of operations plans and procedures involving hazardous and controlled wastes.[18]

Hazardous wastes are stored in RCRA-regulated storage units until ultimate disposal at off-site RCRA-regulated storage units. The KSC also maintains a comprehensive inventory of all RCRA defined hazardous wastes, and controlled wastes not regulated by RCRA.[18] Any radioactive wastes would be shipped off-site to a federal repository. Transportation of any hazardous materials will be done in accordance with the appropriate federal, state, and local regulations.

Given the existing the KSC waste management programs and the relatively small quantities of waste generated by the Space Station (Tables 4-2, and 3) no significant environmental impact is expected from the disposal of these wastes.

3) Effects on the Environment of Laboratory Module Consumables and Wastes

Space Station operations planning has taken into account nearly all foreseeable contingencies to minimize the adverse effects on the environment from the Earth's surface up to orbital altitudes. A large data base has been built on the lessons learned from past experiences on the Skylab missions and unplanned reentry, and from the operations of the Shuttle integrated manned payloads such as Spacelab. These missions presented many of the same problems facing the Space Station, and these lessons are being applied in the Space Station design.

Program requirements have been developed to reduce or eliminate hazards and negative impacts on the earth, atmosphere, or space environments. Negative impacts may result from low probability accidents or operational contingencies such as failure to reboost the Station.

Effects on Air Quality. Effects on the air quality from the Laboratory Module are negligible. Wastes and consumables are maintained in enclosed containers except when processed in orbit. The only potential for interacting

with the air mass is during ground handling (refer to Sec. 4.1.3) and during launch and recovery operations when the materials will be transiting through all regions of the atmosphere. There are no releases of any toxic materials during normal handling and delivery planned. Accidents or emergencies might result in some release to the atmosphere. During ground operations, effects of an accident would likely be local and temporary because quantities of toxic materials will be sufficiently small that diffusion to harmless levels would quickly occur. Controlled reentry and burnup, if used, would also have negligible effects due to the destructive process of the reentry burnup, and the diffusion and dispersion properties of the atmosphere, especially below the tropopause.

Effects on Land and Water Quality. Unplanned release of toxic wastes could occur during certain Shuttle landing contingencies, but the amounts of material are small, and the effects are confined to the land and water areas adjacent to an impact or ditching site. NASA maintains contingency safety procedures which would be implemented to minimize any release of toxic wastes.

Effects on Biotic Resources. Environmental impacts are insignificant, given the containment packages and the enclosing vehicle or module used to deliver wastes and consumables. Under normal circumstances, there is no direct contact with the environment.

Effects on Human Health. Toxic materials are kept from human contact during delivery and recovery transport. Exposure of ground personnel is prevented by operational procedures and equipment which reduce or eliminate human contact. Accident potentialities are addressed by safety procedures and contingency plans at the processing sites.

4.1.4.2 International Laboratory Modules

These modules are similar in function and slightly smaller in volume to the U.S. Laboratory Module. Program requirements dictate identical processing of consumables and wastes for all elements of the Station. As with the U.S. Laboratory Module, there are no significant environmental impacts anticipated resulting from launch, orbital resupply and waste removal, and deboost/reentry operations of these two international modules.

4.1.4.3 Habitation Module

The Habitation Module will have a minimum of two independent waste collection systems for both fecal and urine collection. The systems are being designed to avoid contamination of the cabin atmosphere with waste material, bacteria, toxicants, or noxious odors.[22] Processing of metabolic waste, regenerative process effluents, and other waste for conversion to useful or disposable products or for return to Earth shall be provided by the Environmental Control and Life Support System (ECLSS).

Waste products from the habitation module and the laboratory modules will be handled separately.

4.2 ADDITIONAL IMPACTS

This section addresses impacts other than those which were identified in the scoping process.

4.2.1 Atmospheric Impacts

4.2.1.1 Introduction

The atmospheric impacts of the U.S. launched components of the Space Station can best be discussed by separating them according to the layers of the atmosphere as discussed in Section 3.1. The impacts from the ESA launched components are expected to be about the same as the U.S. launched platforms.

4.2.1.2 Tropospheric Impacts

The air quality impacts, which will occur in the troposphere as a result of the Space Station program, will come from several sources:

- Manufacturing activities associated with the fabrication of Space Station components, experiments, and payloads
- Major planned modification of facilities, in order to support the program
- Launch activities
- Transportation of hardware and supplies

The manufacturing of components of the Space Station and equipment for use in experiments and payloads will be performed at ground-based facilities. These facilities will be both commercial and governmental installations located throughout the country. All of these facilities are subject to the air quality regulations promulgated by the EPA, and the respective states where the facilities are located. NASA will require that its Space Station contractors conform to prevailing air quality regulations. Any increases in emissions as a result of the Space Station Freedom program are expected to be minimal.

In the event a major modification of either a contractor's or a NASA facility is required, such modification will be assessed in appropriate environmental documents prior to making such modification. The necessary environmental permits will be obtained prior to making any major modification.

Twenty nine Shuttle flights, over approximately four years, beginning in 1995, will be needed to construct the Space Station in orbit and to provide routine logistical support. The maximum number of launches during a one year period will be ten. The impact of the Shuttle launches on the the atmosphere has been previously addressed in the Space Shuttle EIS.[24]

In the Space Shuttle program EIS, atmospheric impact analysis was based on a launch rate of 40 Shuttle flights per year from Kennedy Space Center. The current launch rate is substantially less than that. The launches required for the Space Station are included in NASA's current launch manifest planning and do not represent any increase above that assessed in the Space Shuttle EIS analysis. The U.S. Polar Orbiting Platform (POP) will be launched on a Titan IV expendable launch vehicle. The effects

on the atmosphere of the launch of the POP were included in the baseline launch schedule addressed in the Environmental Assessment TITAN IV Space Launch Vehicle Modification and Operation.[20]

Transportation of hardware and supplies to the launch site will not result in a significant increase of air pollutant emissions. Thus, air quality impacts should be insignificant.

In summary, there are no significant adverse atmospheric impacts expected within the troposphere as a result of the Space Station Freedom program.

4.2.1.3 Stratospheric and Mesospheric Impacts

The impact of the Space Station on the stratosphere and mesosphere (i.e. ozone layer) will result from the flights of the Shuttle through these layers, and from the use of trichlorotrifluoromethane (CFC 113) during cleaning operations around the launch area. The impact of these activities has been discussed in detail in the Space Shuttle EIS[24], the KSC EIS[29], the Final Tier 2 EIS for the Galileo mission[25] and the Final Tier 2 EIS for the Ulysses mission[19].

Given that the Space Station's normal operating altitude will be approximately 463 km (250 n.m.) above the ozone layer (i.e. the stratosphere), no significant impact is expected due to its presence.

4.2.1.4 Ionospheric Impacts

The ionosphere is the region of the atmosphere above 80 km where the action of the sun's radiation results in positive ions and electrons. This is the region where the Space Station will be located for its lifetime. There are two environments which are of concern: (1) the natural environment, which is that which exists in the absence of the Station, and (2) an induced environment, including the molecular, particulate, photon, and wave environment which results from the disturbing effects of a large object flying at orbital speeds through the ionosphere. A subset of the induced environment is the contaminant environment which is produced when solids, liquids, or gases are released from the system and interact with the induced environment in an array of chemical and physical processes, which are not completely understood.[30]

The potential sources of releases to the ionosphere from the Space Station are:

- Thruster firings for the Space Station, Shuttle, and the associated platforms
- EVA propulsion system operation
- Leakage
- Outgassing
- Venting

The primary propulsion system for the Space Station will be a hydrazine system. There will also be very small resistojets which will burn waste gases at a temperature of 1400°F. The hydrazine system will be used for altitude control, backup attitude

Table 4-4
Possible Space Station Contaminants*

VAPOR	MOLECULAR WEIGHT	RELEASE AMOUNT
Atoms		
Helium	4	7.5×10^{25}[a]
Neon	20	3.0×10^{24}[a]
Argon	40	1.5×10^{24}[a]
Aluminum	27	10^{15} to 10^{17}[b]
Phosphorous	31	10^{15} to 10^{17}[b]
Manganese	54.9	10^{15} to 10^{17}[b]
Gallium	69.7	10^{15} to 10^{17}[b]
Arsenic	74.9	10^{15} to 10^{17}[b]
Cadmium	112.4	10^{15} to 10^{17}[b]
Indium	114.8	10^{15} to 10^{17}[b]
Tin	118.7	10^{15} to 10^{17}[b]
Tellurium	127.6	10^{15} to 10^{17}[b]
Mecury	200.7	10^{15} to 10^{17}[b]
Lead	207.2	10^{15} to 10^{17}[b]
Molecules		
Carbon Monoxide	28	2.1×10^{22}[c]
Nitrogen	28	1.1×10^{25}[c]
Oxygen	32	9.4×10^{24}[c]
Carbon Dioxide	44	1.4×10^{24}[c]
Acetylene	26	2.3×10^{22}[c]
Sulfur Hexafluoride	146	4.0×10^{23}[c]

[a]Atoms
[b]Atoms s^{-1}
[c]Molecules per run

* These amounts were estimated prior to recent configuration changes. Because Station venting is now planned to increase, these estimates are likely to change. An updated estimate will be included in Tier II of the EIS.

control, and reboost. The resistojet system will be used to augment reboost when waste fluids are available.[31] The U.S. POP propulsion will be provided by a monopropellant hydrazine system.

Based on preliminary studies and experience with numerous satellites and the Shuttle, the ionospheric impact of the aforementioned propulsion systems is not expected to be major. Future studies are planned to increase our knowledge of the global ionospheric impact of these propulsion systems.

A variety of molecular contaminants resulting from leakage, outgassing and venting is expected. It is possible that these contaminants could produce an ionized cloud which will trail behind the Space Station like the tail of a comet.[30] Table 4-4 is a summary of some possible contaminants from materials science and life science experiments on the Space Station.[32] The atoms listed in this table should present no hazard to the Space Station environment. However, the molecules listed in the table can be hazardous to both the optical and plasma environment. Further studies are needed in order to better understand: (1) transient behavior of the release, including gas dynamics, collisional airglow excitation, and chemical reactions; and (2) long-term global distribution of the material in neutral and ionized states. The Combined Release and Radiation Effects Satellite (CRRES) scheduled for launch in 1990, is expected to provide the necessary data to enhance our understanding in these areas.

As an experiment to study the modification of the plasma density by the release of chemically reactive vapors, the Shuttle Orbital Maneuvering Subsystem (OMS) engines on the Spacelab 2 flight were fired for 16 seconds at a 317 km (174 n.m.) altitude over the Arecibo Observatory on July 30, 1985. The release included CO_2, H_2, and H_2O which contribute to the chemical depletion of the ionosphere. High resolution incoherent scatter radar observations showed that a localized depletion or "hole" was formed in the Ionosphere which fell and eventually (~5 min) disappeared within the bottomside F- region ionosphere.[33] Emissions from the Space Station's propulsion system could have a similar effect.

The environment around the Space Station will be altered by the presence, operation, and motion of the Space Station. Several of these effects may be difficult to predict quantitatively. Some of the known induced effects are as follows:[34]

- Plasma wake. Variation of plasma density from leading to trailing sides
- Neutral wake. Variation of neutral density
- Plasma waves induced by vehicle motion
- Vehicle glow on the side facing into the velocity vector
- Change of local plasma density and production of electrical noise caused by spacecraft charging
- Enhancement of neutral density and change of neutral composition by outgassing, off-gassing, effluent dumps (if any), and the plumes from thrusters
- Emission of conducted and radiated electromagnetic power by systems on the Space Station

- Deliberate perturbation of the environment by active experiments and devices such as the following:
  - -- Transmitters/wave injectors
  - -- Particle beam emitters; accelerators
  - -- Plasma emitters such as cold cathode plasma bridges
  - -- Chemical releases
  - -- Laser beams

- Visible light generated by the Space Station and reflections from it that affect observations

- Induced currents and voltage potential differences in the vehicle due to $E = VxB$ electric fields (0.1 - 0.5 volts/m) which are generated by the motion of the Space Station (v) through the magnetic field (B). These can draw current through the surrounding plasma.

- Currents and other effects in the plasma produced by exposure of surfaces held at different potentials (e.g., parts of solar panels)

In summary, the impacts of the Space Station on the ionosphere are not completely understood; however, they are expected to be confined to the vicinity of the Space Station. Based on present knowledge, no large scale or long duration impacts are anticipated. A short term localized hole may occur during reboost similar to that observed in the Arecibo experiment. Radio communications should not be significantly affected.[35] NASA, as part of its mandate to maintain the chemical and physical integrity of the upper atmosphere, will continue to study the ionospheric environment, and the effects of the Space Station upon it. NASA has committed to use materials which have low outgassing characteristics in the construction of the Space Station. Additional mitigative measures will be instituted as needed.

4.2.2 Aquatic and Terrestrial Ecology

No direct effects are anticipated on either the aquatic or terrestrial ecology as a result of the Space Station. These communities could be affected if major construction activities become necessary. Impacts associated with these activities would be addressed in subsequent facility documents. In the highly unlikely event of a catastrophic accident resulting in the reentry of the Space Station to the Earth's atmosphere, some localized, short term impacts could occur in the splash/impact footprint.

4.2.3 Water Quality

No significant impact on water quality is expected as a result of the Space Station. NASA facilities and contractors will comply with existing state and federal water quality regulations. The impact of the Shuttle on water quality has been addressed in the Space Shuttle EIS[24]. The impact of the NASA Centers on water quality have been reported in the Environmental Resources Document prepared by each Center. In the highly unlikely event of a catastrophic accident resulting in the reentry of the Space Station to the Earth's atmosphere, some localized, short term impacts could occur in the splash/impact footprint.

4.2.4 Noise

The main impact on the acoustic environment will result from the Shuttle flights. This impact has been previously discussed in the Space Shuttle EIS. Any impact due to construction activities necessary at ground based facilities, will be assessed in subsequent environmental documents as appropriate. Acoustic impacts from other aspects of the Space Station program are considered to be insignificant because all development activities will take place indoors.

4.2.5 Transportation

Transportation of Space Station components, payloads, propellants, fluids, etc., to and from various locations within the United States will be accomplished by standard commercial transportation procedures. In all cases, applicable local, state, and federal regulations on air, water, and ground transportation will be observed. These transportation activities will contribute to the consumption of fossil fuels (gasoline, diesel, and jet fuel). No significant environmental impacts are anticipated due to transportation activities associated with the Space Station.

4.2.6 Nonionizing Radiation

Radio transmissions between the Space Station and Earth will be sent using the Tracking and Data Relay Satellite System (TDRSS). The maximum output to the TDRSS antennas is about 750 watts which is spread by the antennas over many square kilometers. This results in a peak ground exposure below 10^{-6} milliwatts/cm^2, well below power density levels recognized as safe for long-term exposures. The TDRSS uplink power levels have been placed under security classification and are unavailable. The use of large antennas at the White Sands Ground Terminal indicates that the effective radiated power levels will be high. The OSHA safety standards permit an occupational exposure of 10 milliwatts/cm^2 and brief public exposures of 5 milliwatts/cm^2 are tolerated (e.g., microwave oven leakage). Exposures at or below 1 milliwatt/cm^2 have no long-term effects on mammals.

The beam transmitted from the ground Station is directed up through a clear area toward the Space Station, so that there is little opportunity for the public to receive significant exposures. The off-axis (side lobes) power levels usually decrease to 0.01 of the on-axis values for angles greater than 5 degrees from the axis. The antennas are pointed more than ten degrees above the horizon. Ground Station design requirements thus preclude most public exposures.

4.2.7 Socioeconomic Effects

As can be seen from the previous discussions in Section 2, approximately $24 billion (in real year) dollars will be spent on the Space Station during the period between 1982 and 1998 when the Station hardware development is complete. In the peak year of development activity, this money will directly affect the lives of over 50,000 employees, in dozens of companies across the nation. Approximately 19,000 of these will be employed by the WP Contractors and the support contractors in Reston, Virginia; the rest will be subcontractor and vendor employees. This discussion will focus on the prime contractors and their major subcontractors. Figure 2-11 identifies the WP Contractor locations. Minor subcontractors and vendors have not yet been selected and so are not identified here.

The vast majority of jobs and dollars will go to about thirteen states (the WP Centers and contractor teams) with the balance trickling down to perhaps another ten states (the subcontractors, suppliers and transportation companies). All of these communities will benefit from the Space Station Freedom program, as the program provides jobs, social pride, and income to the local economies. The impact is positive nationwide, with benefits being greater in some communities than others. Impact on some of the communities where the work will take place may be substantial. In many cases, however, the cities and communities of the NASA WP Centers and aerospace contractors are well populated, have low to standard unemployment rates, and diversified economies. These areas will be less strongly affected by the Space Station Freedom program.

As would be expected, about 30% of the jobs are in California where most of the nation's aerospace research, development, manufacturing, and testing takes place. Another 47% is located in those states where there are NASA Centers with predominately Space Station-related businesses.

The following subsections discuss, in detail, the economic impact of the proposed action on the communities surrounding the NASA Centers and other locations most affected.

4.2.7.1 George C. Marshall Space Flight Center (MSFC) - Work Package 1

The Boeing Company is the prime contractor in conjunction with Marshall's WP 1, and is responsible for the detailed design, manufacture, integration and testing of the Space Station Laboratory and Habitation Modules and the environment control and life support system and certain module outfitting.

In addition to Boeing, approximately 20 subcontractors will be employed for WP 1. Most of the jobs in the WP will be centered in four major regions of the country: California, Texas, Alabama and the Northeast. Approximately 4,400 employees (hereafter referred to as Full Time Equivalents or FTEs) will be required for WP 1 during the peak years of the development program (1992-93), with 59% of the prime activity's manpower centered in Huntsville, Alabama. Most will be working directly for Boeing and the remaining Huntsville manpower working for subcontractors (Teledyne Brown, Intergraphics, Lockheed, and TRW.)

Huntsville has a current population of 167,400. Approximately 128,300 of those residents are employed, with non-manufacturing firms (96,100 employees) being the largest employers in the city. Overall unemployment is estimated at 5.2%[36]. If all the manpower requirements in Huntsville are filled as new positions, the current employment level will rise by approximately 1%. But because it is unlikely that all, or even a majority of, manpower requirements will be new hires, WP 1 will probably not have a statistically significant impact on the current overall employment rate. It is also unlikely to alter the composition of the employment base, or cause significant levels of relocation to or from the Huntsville area. Positive impact to engineering-related employment will occur, however.

Additional employment for WP 1 will be centered in California (18% of the WP total.) Approximately 10% of the California jobs (approximately 440 FTEs) will be at Lockheed Corporation in Sunnyvale, and the remaining 8% (approximately 350 FTEs) will be employed at other various locations throughout the state. The addition of these 890 jobs to the major metropolitan areas of California is not expected to have significant impact on the current composition of the work force or the current

employment levels. A significant amount of relocation is also not expected to occur due to the influence of WP 1 in California.

Approximately 11% of the manpower requirements (480 FTEs) for WP 1 will be centered in Houston, Texas. Grumman Aerospace will have the majority of these jobs with approximately 220 FTEs. ILC Systems will have about 180 FTEs, and Astro Systems and LTV will have the remainder. Houston has a current population of 1,700,777, and an unemployment rate of 7.7%. The city is currently targeting aerospace firms as a promising area of growth in employment and industry.[37] Once again, although beneficial, the addition of Space Station jobs to the Houston area is not expected to alter the basic composition of the work force, or greatly impact the employment rate. Relocation will also not be a factor in this area. Clear Lake, the suburb where the JSC is located, will be more directly and beneficially affected.

The other major concentration of employment related to WP 1 will be in the Northeastern United States, although no one subcontractor in that area will have more than 6% of the total. These subcontractors include Westinghouse, Telephonics, Fairchild Weston, Hamilton Standard, Arde, and Interleaf. No significant impact is expected on the population and employment levels in these areas.

The development phase of the Space Station and the duration of all projects associated with WP 1 extends from December of 1987 through the first quarter of 1998, at which time the Space Station will be completely assembled and fully operational.

The specific regional effects of Space Station-related employment should not be particularly substantial in any of the WP 1 production centers, relative to the existing employment demographics. Roughly 90% of the direct manpower required for WP 1 will be drawn from metropolitan areas. The effect of an additional 4,400 jobs in these areas will have a beneficial, although statistically insignificant effect. The principal effect of the program will be to provide a continued foundation for the overall health of existing aerospace firms which are major employers.

4.2.7.2 Lyndon B. Johnson Space Center (JSC) - Work Package 2

McDonnell Douglas (MDAC) is the prime contractor for the Johnson WP 2, responsible for the detailed design and fabrication, integration, and testing of the overall architecture/assembly structure, most of the Station's distributed systems, Shuttle interfaces, and utility integration. This WP will also produce the truss structure which will in turn provide structural integrity support for the entire Space Station complex.

Although the JSC in Houston, Texas will direct the contract for WP 2, the bulk of the manpower (roughly 54%) will be centered in Huntington Beach, California. The city of Huntington Beach has an estimated population of 187,740. The surrounding region of Orange County has a population of 2.2 million with an approximate work force of 1.2 million. Major employers in the area are Hughes Aircraft, Rockwell International, Pacific Bell, McDonnell Douglas Astronautics, Disneyland , and Ford Aerospace.

Overall unemployment in Orange County is estimated to be roughly 2% or 24,000 individuals.[38] MDAC estimated at the time of its contract award that its average required work force in Huntington Beach would be approximately 3,200 FTEs during

the peak years of the program. A proportion of them would be transferred internally and thus not constitute new hires.

Additional employment for WP 2 will occur throughout the State of California (9% or approximately 660 FTEs at Lockheed Corporation, and an additional 4% or approximately 162 FTEs in various other firms throughout the state). Thus a total of 54% or roughly 2,185 FTEs of the manpower for this effort will be used within the state of California.

WP 2 will have an estimated total average manpower requirement of roughly 8,300 FTEs to complete this project. However, it should be understood this figure does not necessarily indicate the number of new hires related directly to this project. It can be assumed McDonnell Douglas and its subcontractors will make a series of internal decisions whether to transfer employees within existing divisions or execute new hires. For example, although it is anticipated that 54% of the FTEs required for WP 2 prime and subcontractor activities will be centered within the state of California, it would not be accurate to assume that 4,500 new jobs/hires will be created there. Given the internal and proprietary nature of these corporate decisions, it is impossible to accurately predict the amount of truly "new" employment which will occur.

The other major concentration of employment related to WP 2 will occur in Clear Lake, a suburb of Houston, Texas. The average work force requirement, based on the Phase C/D estimates, will be about 1,500 FTEs. This figure includes MDAC, IBM, and Lockheed FTEs.

The employment in California and Houston for accounts for roughly 72% of the total manpower requirement WP 2. The additional 28% or approximately 2,300 jobs will be located in Arizona, Florida, Connecticut, and New Jersey.

The largest single location for these smaller groups is in Camden, New Jersey. Camden is a city of approximately 85,000 people with an employable work force of about 29,300 people. The city has an unemployment rate of 11.5%, while Camden County has a much lower rate of 4.3%. GE/RCA is the largest employer in the region.[39] The subcontract to GE/RCA for WP 2 requiring roughly 750 FTEs should have a small but beneficial effect, therefore, on the immediate population, particularly if a large portion of these are new hires.

The development phase of the Space Station and the duration of McDonnell Douglas' project for WP 2 extends from December of 1987 through the first quarter of 1998, at which time the Space Station will be completely assembled and fully operational.

The specific regional effects of Space Station-related employment should not be particularly substantial in any of the WP 2 production centers, relative to the existing employment demographics. Roughly 87% of the manpower required for this job will be drawn from metropolitan areas. The effect of an additional 3,520 jobs in these four or five areas should have a small beneficial impact particularly in the areas with relatively high unemployment; Clear Lake, Texas and Camden, New Jersey. The principal effect of the program will be to provide a continued foundation for the overall health of existing aerospace-related industries, which are major employment centers.

4.2.7.3 Goddard Space Flight Center (GSFC) - Work Package 3

General Electric Company (GE) is the prime contractor in conjunction with Goddard's WP 3, and is responsible for the detailed design, manufacturing, integration and testing of the U.S. Polar Platform and payload attachment hardware.

GE plants associated with the Space Station program are located in Valley Forge and King of Prussia, Pennsylvania and East Windsor, New Jersey. GE will hire 81% of the personnel directly associated with WP 3. The rest will be located primarily in California (TRW, Teledyne Systems). King of Prussia and Valley Forge are suburbs of Philadelphia, and have a current population of 26,000.[40] East Windsor is located in south-central New Jersey, and has a current population of 23,781.[41] Little relocation to or from either city is expected due to the manpower requirements of WP 3. A total of approximately 2,000 direct FTEs will be required to complete WP 3.

GE estimates that a total of 1,160 GE FTEs, exclusive of subcontractors, will be required for WP 3. Of this total, roughly half will be new job opportunities will be created by GE. That is, the number of employees will peak at about 1,160 in 1992-3.[42]

The current employment level of Valley Forge and King of Prussia, Pennsylvania is 48,950[40] and the current employment level of East Windsor, New Jersey is 10,135.[41] GE indicates that increases in local employment at GE, due to the Space Station Freedom program, will raise the current employment level in King of Prussia by up to 0.7%. Local employment in East Windsor could be increased by approximately 2.4%.

The composition of employment opportunities for WP 3 will be 65% engineering jobs, 20% manufacturing jobs, with all other categories comprising the remaining 15%. The composition of the local employment base is not expected to be altered by the WP 3 contract.

The development phase of the Space Station and the duration of General Electric's project for WP 3 extends from December of 1987 through the first quarter of 1998, at which time the Space Station will be completely assembled and fully operational. The only construction associated with this WP will be the addition of office facilities at both the King of Prussia and East Windsor locations. The particular and unique fluctuation in employment which may stem from WP 3 will have a significant beneficial economic effect on the various communities where the work will occur, particularly in East Windsor.

4.2.7.4 Lewis Research Center (LeRC) - Work Package 4

The prime contractor for WP 4 is Rocketdyne, a division of Rockwell International. Rocketdyne is responsible for the design, manufacture, integration and testing of the Space Station power generation facilities, as well as the power management and distribution systems for the Station.

In addition to Rocketdyne, approximately 10 subcontractors will be employed for WP 4. Most of the work (86%) will be distributed throughout various parts of California. A minor share of responsibility will be allocated among five other states. The primary work site will be Rocketdyne's Canoga Park facility, where approximately 60% of the total jobs needed for WP 4 will be located.

An approximate total of 2,800 FTEs will be required for WP 4. Roughly 1,700 of these FTEs will work directly for Rocketdyne in Canoga Park, California. The company currently employs 8,400 people. The need to hire or relocate from within Rocketdyne has not yet been determined.

Canoga Park, a city with population of 145,000, is located in Los Angeles County. Rocketdyne currently employs 6% of the Canoga Park population, but only 0.1% of the entire Los Angeles County population. If Rocketdyne hires all of the required 1,600 employees from outside the company (which would be unlikely), the current employment level in the county will rise by only about 0.06%. Of the 4.2 million people employed in Los Angeles County, approximately 21%, or 906,500 workers, are employed in manufacturing. The local unemployment rate is currently 5.9%. Therefore, if new hires are necessary for WP 4, it is assumed that manufacturing labor should be available and very little relocation to Los Angeles County will be necessary. The composition of the local employment base of Canoga Park or Los Angeles County is not expected to be significantly altered by WP 4.

Approximately 250 FTEs will be required for the work conducted under subcontract by Lockheed Corporation in Sunnyvale, California. Sunnyvale, located in Santa Clara County, is a suburb in the San Francisco metropolitan area. Lockheed, with 27,000 employees, is the largest employer in the county.[43] The addition of these FTEs will not significantly impact either the employment rate of the composition of the employment base. In addition, relocation will not be a significant factor for either Sunnyvale or Santa Clara County. Ford Aerospace, also located in Santa Clara County, will require approximately 170 FTEs at its Palo Alto facility. Ford Aerospace locally employs 3,700 workers. These new jobs will not significantly impact the employment rate, the demographic composition of the employment base, or relocation, although they will be beneficial.

General Dynamics, another subcontractor who will require about 110 FTEs for WP 4, is located in San Diego, California. Even though General Dynamics ranks as the second largest employer in the county,[44] the additional jobs will not have a significant impact on the city or the county.

Approximately 500-600 other FTEs will be distributed among subcontractors located in Texas, Ohio, New Jersey, and Florida. In each case, the percentage of new jobs created does not significantly impact the area in which the subcontractor is located.

The development phase of the Space Station and the duration of all projects associated with WP 4 extends from December of 1987 through the first quarter of 1998, at which time the Space Station will be completely assembled and the operational phase will begin.

The specific regional effects of Space Station-related employment should not be particularly substantial in any of the WP 4 production centers, relative to the existing employment demographics. Roughly 91% of the manpower required for WP 4 will be drawn from metropolitan areas. The effect of an additional 2,800 jobs in these areas should not be statistically significant. The principal effect of the program will be to provide a continued foundation for the overall health of existing contractors and subcontractors which are major employment centers.

4.2.7.5 John F. Kennedy Space Center (KSC)

Launch of most Space Station hardware will occur at the KSC. Activities at this site include Shuttle launch operations, payload processing, and all ground processing operations. Space Station and logistics elements will be inspected at KSC before ground processing.

Edwards Air Force Base has been designated a contingency landing site, extending KSC responsibility to the California base. Vandenberg AFB will be used to launch the U.S. Polar Platform.

The KSC is located near Cocoa Beach, Florida. The surrounding community, including Cape Canaveral, Titusville, and Merritt Island, has been dominated by space launch activities since the Center was built in the 1950's.

The local population of 126,300 has grown at a rate of approximately 3% per year for the last decade. The unemployment rate of 4.4% has been relatively stable. The 167,000 local work force consists of many people who are involved with the space launching facilities. The largest area employer is the KSC, with 15,850 FTEs. This is followed by the Eastern Space and Missile Center/USAF, with 13,195 FTEs. Manufacturing companies employ at much lower levels. For example, the largest manufacturer employs 800 FTEs and the second largest, a solid rocket booster producer, employs 700.

Launches of Space Station elements and payloads will take place using the Shuttle. The Shuttle program, begun early in this decade, has had a significant impact on the local community. This change stems from ongoing operations of the Shuttle which will occur regardless of the Space Station program. The change of traditional Shuttle payloads to Space Station elements should not significantly change the operations affecting the Cocoa Beach area. Space Station operations should cause a significant employment increase in the KSC area.

The Space Station program will create changes at the KSC due to the construction of a Space Station unique processing facility scheduled to begin in July, 1989. Development costs for the new facility are $68.74 million, which will be allocated among hardware and labor costs. The processing facility should be operational by March, 1994, spreading the spending of the construction funds over a period of five years.

According to the five-year plan for Space Station construction of facilities, the basic cost of the processing facility at the KSC will be broken down in three years as follows: In FY1990, $43 million will be spent; $27 million in expenditures will be used in FY1991; and $13.7 million is left as a "place holder" for an optional construction of third and fourth stories on the facility in FY1992.

In addition to this facility, Space Station-related construction will include a Space Station hazardous processing facility which will cost $2.3 million in FY1994. The last building planned for Space Station use will be a logistics facility, creating an expenditure of $36.9 million in FY1992.

The KSC is also sponsoring construction activities at the VAFB. This involves modifications to two existing buildings, one for the Polar Platform, with a cost of $3.3 million, and the other for hazardous servicing operations, at a cost of $2.6 million. These expenditures are planned for FY1992.

As the contracts have not yet been signed for the construction of these facilities, the contractors have not been selected. The number of FTEs required for the construction will not be determined until design contracts are completed.

4.2.7.6 Vandenberg Air Force Base (VAFB)

The launch activities associated with the POP will take place at VAFB. The Base is already capable of making such launches and has done so in the past. The personnel used to launch the POP will come from existing VAFB staff and thus, no impact is anticipated on employment levels in the region. The environmental impacts of Titan IV launches are described in detail in the Environmental Assessment, Titan IV.[20]

Toxic waste quantities are not expected to be significant in their impact on the environment because of their small quantities and packaging provisions during delivery, experimentation, and return or destruction.

4.3 ENVIRONMENTAL CONSEQUENCES OF THE POWER TOWER ALTERNATIVE

The environmental impacts of the Power Tower configuration would be virtually identical to those of Space Station Freedom. Although the Power Tower would be different in appearance and capability, it would be constructed of essentially the same materials. The Power Tower would be assembled and resupplied using the Shuttle and it would be operated just as Space Station Freedom would be operated. Both configurations would be permanently manned and would conduct payload operations 24 hours per day.

Both configurations would be subject to the same failure tolerance requirements and would present the same hazards in the unlikely event of accidental reentry into the atmosphere.

4.4 ENVIRONMENTAL CONSEQUENCES OF THE MAN-TENDED APPROACH (MTA)

The environmental consequences of the MTA would not differ significantly from the proposed action. The MTA configuration would be essentially the same as the early assembly phase of the permanently manned Station. It would function in an autonomous mode for 90 day periods which could possibly increase the likelihood of uncorrected failures. There would be fewer experiments and consumables aboard so any leakage or off-gassing would be less than with a permanently manned Space Station. Orbit maintenance and control would be the same as for the permanently manned Station. The Shuttle flights and manufacturing activities would remain unchanged. The potential environmental impact, in the unlikely event of an unplanned return to earth, would be very similar to such an event occurring during the early assembly stage of the permanently manned Station when not all modules would be in orbit.

4.5 ENVIRONMENTAL CONSEQUENCES OF THE NO ACTION ALTERNATIVE

4.5.1 Physical Effects

Under this alternative, the dedication of resources to the Space Station would cease and any potential environmental effects from its development and operation would be avoided. However, NASA would continue to pursue, to the extent possible, the research objectives discussed in Section 1.2. These activities would create environmental impacts caused by payload launches in alternative launch vehicles,

deploying payloads or unmanned platforms, and performing any terrestrial equivalents of planned research.

In addition, cultural and socioeconomic impacts would result from cancellation of the Space Station Freedom. This alternative would impact the regional economies of the WP Centers and manufacturing sites. The positive socioeconomic impacts would be lost.

A substantial number of the planned Space Station user investigations could not be performed under this alternative. Investigations into long term human exposure to space and microgravity research projects have no alternative means for their accomplishment. Some payloads requiring stellar, solar, or Earth views also have no terrestrial equivalents, but could possibly be accomplished using the Shuttle or ELVs.

4.5.1.1 Debris Reentry

If Space Station Freedom is not placed in orbit, it removes the potential for localized environmental impact from Space Station Freedom's uncontrolled reentry. However, NASA would continue to place payloads and unmanned platforms in space. The possibility of uncontrolled de-orbit of these facilities presents the same type of risk, though proportionally smaller because of smaller mass, as the Space Station's reentry.

4.5.1.2 Atmospheric Impacts

Cancellation of Space Station Freedom would also cancel the dedicated Space Shuttle flights needed for Space Station assembly and operation. If the total number of such flights each year is reduced accordingly, the environmental impact from Shuttle launches would be reduced. However there exists a substantial queue for payloads awaiting assignment to a launch vehicle. It is extremely unlikely that the portion of the NASA fleet currently assigned to Space Station Freedom would be idle if the program were canceled. Instead, the Shuttle launch rate would remain constant with substitute missions assigned to these flights. Included in these flights would be those investigations now planned for Space Station Freedom which could be fully or partially accomplished by other means. The impact on the ionospheric environment would be similar to that created by the Space Station, though more dispersed. The number of Shuttle flights per year would remain the same and unmanned platforms and payloads would create disturbances. The net effect is that this alternative would produce the same atmospheric impact as proceeding with development of Space Station Freedom.

4.5.1.3 Aquatic and Terrestrial Ecology

No construction activities would be needed. Therefore, the possibility of any impact from these activities would be eliminated. Reentry of debris from other (non-Station) spacecraft could cause localized short-term impacts.

4.5.1.4 Water Quality

As previously discussed in Section 4.5.1.2, the impact resulting from the Shuttle launches would be identical to that resulting from the proposed action. Reentry of other (non-Station) spacecraft debris could produce a localized short term impact.

4.5.1.5 Noise

The prospect of noise impact due to construction activities would be eliminated. As discussed in Section 4.5.1.2 the impact from the Shuttle launches would remain the same as that resulting from the proposed action.

4.5.1.6 Transportation

Transportation of Space Station components would be eliminated. Payloads, propellants, and fluids would be transported to the KSC for the Shuttle launches. Thus, the impact on transportation would remain the same as for the proposed action.

4.5.1.7 Toxic Materials

Some of the experiments, scheduled for the Space Station which produce toxic wastes would be assigned to the Shuttle launches. As is the case with the proposed action, no significant impacts are expected because of the small quantities involved.

4.5.2 Socioeconomic Effects

It is difficult to determine the specific socioeconomic impact which would result from a decision to cancel the Space Station program. As discussed earlier, there are significant uncertainties involved with the specific proprietary decisions involved with each of the Space Station WP contractors. Thus, specific impacts of proceeding with or canceling the program are difficult to assess. However, cancellation would certainly cancel the beneficial effects on local employment in areas where Space Station hardware is being developed.

A decision against proceeding with the Space Station program would also constitute an abrogation of U.S. leadership in space. This intangible cost alone would be substantial. Such an action would have a serious negative impact -- though it may be difficult to predict with any precision at this time -- on this country's national prestige, economic vitality, and international competitiveness. It would result in U.S. abrogation of the formal agreements with our international partners. Such action would call into serious question the reliability of the U.S. as a partner in space activities.

Timing of a decision to cancel the Space Station would also be an important consideration. If the work is not begun, the benefits and overall impact of a project that does not exist can never be determined. If the contracts are canceled after employment decisions have been made, those people contributing to the project will be immediately without work and/or transferred. The further into the development program the termination occurs, the more costly it is to the government and the more negative an impact it would have on the economy. The later any potential termination occurs, the more damaging the subsequent instability would be to the aerospace community overall.

4.6 RELATIONSHIP BETWEEN SHORT-TERM USES OF MAN'S ENVIRONMENT AND MAINTENANCE AND ENHANCEMENT OF LONG-TERM PRODUCTIVITY

The Station's positive impact on long term productivity could be substantial. The Space Station will provide the foundation for users to conduct research or other industrial activities or for commercial providers of services in outer space. This use

may also lead to developments and spinoffs useful to industry. These benefits cannot be measured before the work is actually undertaken. Advances in the areas of robotics, remote sensing, artificial intelligence, and new materials -- all critical Space Station technologies -- could enhance the technological and economic power of the U.S.

In addition to spinoffs, there is the Space Station-related growth of the aerospace industry. The contracts for Space Station work are only one aspect of the potential activities for these companies. Launch vehicles and various services will be necessary when the Station is in place.

Another benefit which is difficult to measure is the advantage to U.S. leadership in space exploration and utilization. A central mission for NASA is the promotion of U.S. leadership in space. The success of such a major project will create opportunities for further activities in space. It will also provide a beneficial means of international cooperation in space endeavors. The Space Station is a project large enough to include partners from many nations. The initiative and primary sponsorship of the Space Station by the U.S. is an important symbol of leadership.

The Polar Platforms of the Space Station provide us with the opportunity to make detailed observations of the Earth and how it is evolving on a global scale. They will enable us to better understand the complex interactions between the atmosphere, the oceans, land masses, and polar ice caps. The better understanding of these interactions will enable us to determine their effects on our environment. The Space Station is not expected to have any significant adverse environmental impacts.

4.7 IRREVERSIBLE AND IRRETRIEVABLE COMMITMENT OF RESOURCES

The Space Station program requires the commitment of both natural and cultural resources. The commitment of natural resources includes the consumption of mineral and biological resources. The commitment of cultural resources includes human and land resources. These basic commitments are not different from those necessary for many other research and development programs; they are similar to the activities that have been carried out in previous space program activities over the past 25 years.

4.7.1 Natural Resources

Activities associated with the Space Station program will utilize and consume various quantities of materials and energy, and in some cases, a minor change in ecological resources may result due to construction activities. This section attempts to estimate, where possible, those natural resources which will be committed as a result of Space Station program activities.

4.7.1.1 Material Requirements

The various materials that will be required for the Space Station program can be divided into three general classes: (1) materials for construction and use of facilities, (2) materials for production and transport of Space Station hardware, and (3) materials consumed as a result of Shuttle launches.

The modification or construction of government or contractor facilities, will require certain building materials. Building materials such as steel, aluminum, concrete, asphalt, wood, and wire will likely be used. The operation and maintenance of

Space Station Freedom facilities may require the consumption of materials such as natural gas, oil, coal, gasoline, diesel fuels, paper, water, paint, and cleaning agents. Existing government and contractor facilities will be used to the maximum extent possible. Existing Shuttle facilities will continue to support launch operations that will provide the necessary Space Station support. In the event a major modification of either a contractor's or a NASA facility is required, such modification will be assessed in subsequent documents.

The manufacture of Space Station flight hardware will require a modest amount of metals, such as, aluminum, stainless steel, carbon, copper, titanium, and other materials. These materials are readily available in large quantities. The amounts which will be consumed by the Space Station are minute compared to the quantities routinely produced. The transportation of Space Station hardware throughout the country will contribute to the consumption of fossil fuels. Space Station hardware will require both ground and air transport, consuming gasoline, diesel fuel, and jet fuel. Transportation activities involving the Space Station's components are considered routine.

In the support of the Space Station program, solid and liquid propellants and other consumable fluids will be expended when the Shuttle is launched. The Space Shuttle EIS[24] describes these quantities. The Space Station will utilize hydrazine for propulsion. It will be supplied routinely by the Shuttle.

4.7.1.2 Energy Requirements

The energy requirements of the Space Station can be divided into three areas: (1) the manufacture of components and payloads, (2) ground based activities in support of the Space Station, (3) Shuttle launches.

The manufacturing of components and payloads will be performed at existing NASA Centers and contractor facilities. These Centers and facilities energy requirements are presently being supplied by existing utilities. No significant increase in energy demand is expected as a result of the Space Station. The ground based activities will also be performed at existing facilities whose energy needs are supplied by existing utilities. No significant increase in energy demand is expected at these facilities as a result of the Space Station. The energy requirements of the Shuttle have been discussed in that EIS.

4.7.1.3 Changes in Biological Resources

Component manufacture and test areas are predominantly located in industrial settings where wildlife use is already minimal. Launch and support facilities at KSC and VAFB are located within wildlife preserves/refuges which are managed for wildlife and utilized for space launch support functions. No effects are expected.

4.7.2 Cultural Resources

No significant changes to cultural resources, employment, land-use, recreational and historical resources are expected.

4.8 UNAVOIDABLE ADVERSE IMPACTS

The primary impacts will be due to the launch activities associated with the Shuttle. These impacts have been discussed in the EIS for the Shuttle.[24] The Space Station, based on present knowledge, is not expected to produce major perturbations in the ionosphere. A uncontrolled reentry of the Space Station could have an impact, the extent of which would depend on the amount and size of the debris which reaches the Earth's surface and on the location where it lands. Other minor impacts could result from construction activities required for ground support functions. No other adverse impacts are expected as a result of the Space Station Freedom program.

Significant modifications (e.g. changing to a hydrazine propulsion system and the venting of nontoxic waste gases) are currently being incorporated into the baseline Space Station Freedom program. Tier 2 of the EIS will address the environmental impacts of these modifications, the probability of accidental reentry of the manned base, and the injury/damage probability associated with such reentry.

5.0 CONTRIBUTORS TO THE EIS

This EIS for the Space Station was prepared for the National Aeronautics and Space Administration by the Technical and Administrative Services Corporation (TADCORPS). TADCORPS has responsibility for completion of the EIS under the direction of NASA. NASA is responsible for coordination, management, review, and acceptance of the EIS.

5.1 List of Preparers

Technical and Administrative Services Corporation (TADCORPS)

Name	Discipline	Experience	Responsibility
Mr. Manfred von Ehrenfried	B.S. Physics	Twenty seven years; Co-Project Manager, Space Station Support Contract	Project Manager
Mr. Doyle McDonald	J. D. B.S. Physics	Twelve years; Space Shuttle and Space Station Development	Environmental Law, Space Systems Engineering
Mr. John Martin	M.S. Meteorology	Twenty four years; Environmental Consultant	Assistant Project Manager/ Meteorology and Air Quality/ Environmental Sciences
Mr. William Campenni	M.S. Aerospace Engineering	Twenty four years; Aerospace Consultant	Waste Handling and Disposal

The Egan Group

Name	Discipline	Experience	Responsibility
Mr. John J. Egan	M.B.A.	Fifteen years; Financial Analyst	Socioeconomics
Mr. Noah Rifkin	M.P.A.	Eight years; Policy Analyst	Socioeconomics
Ms. Patricia J. Stacey	M.B.A.	Seven years; Economic Analyst	Socioeconomics
Ms. Alison Watkins	B.S. Foreign Service	One year; Researcher	Socioeconomics

National Aeronautics and Space Administration

Name	Discipline	Experience	Responsibility
Mr. James Higgins	B.S. Engineering	Twenty one years; Naval Propulsion Engineering; Space Station Development	Technical Monitor
Mr. Lewis Andrews	M.S. Systems Management	Twenty years; Environmental Engineering	NEPA Coordination, Environmental Compliance
Ms. Joyce Jatko	M.S. Environmental Engineering	Thirteen years; Facilities and Environmental Engineering	NEPA Coordination, Environmental Compliance
Mr. Kenneth Kumor	J.D. M.B.A.	Fourteen years; Environmental Engineering and Policy Formulation	NEPA Coordination, Environmental Law and Compliance

In addition, the following NASA personnel contributed to the preparation of this document.

Ms. Margaret Edwards served as the Technical Monitor.

Dr. Dana A. Brewer was responsible for Systems Engineering, Debris Analysis, and Payload Operations.

6.0 DISTRIBUTION LIST

Advisory Council on Historic Preservation
Advisory Commission on Intergovernmental Relations
Agency for International Development
Council on Environmental Quality
Department of Agriculture
Department of the Air Force
Department of the Army
Department of Commerce
Department of Defense
Department of Education
Department of Energy
Department of Health and Human Services
Department of Housing and Urban Development
Department of the Interior
Department of the Navy
Department of State
Department of Transportation
Department of the Treasury
Environmental Protection Agency
Federal Aviation Administration
Federal Communications Commission
Federal Energy Regulatory Commission
Federal Maritime Commission
General Services Administration
National Academy of Sciences
National Science Foundation
Office of Management and Budget
Smithsonian Institution

Alabama State Single Point of Contact
Alaska State Single Point of Contact
Arizona State Single Point of Contact
Arkansas State Single Point of Contact
California State Single Point of Contact
Colorado State Single Point of Contact
Connecticut State Single Point of Contact
Delaware State Single Point of Contact
Florida State Single Point of Contact
Georgia State Single Point of Contact
Hawaii State Single Point of Contact
Idaho State Single Point of Contact
Illinois State Single Point of Contact
Indiana State Single Point of Contact
Iowa State Single Point of Contact
Kansas State Single Point of Contact
Kentucky State Single Point of Contact
Louisiana State Single Point of Contact
Maine State Single Point of Contact
Maryland State Single Point of Contact
Massachusetts State Single Point of Contact
Michigan State Single Point of Contact
Minnesota State Single Point of Contact

Mississippi State Single Point of Contact
Missouri State Single Point of Contact
Montana State Single Point of Contact
Nebraska State Single Point of Contact
Nevada State Single Point of Contact
New Hampshire State Single Point of Contact
New Jersey State Single Point of Contact
New Mexico State Single Point of Contact
New York State Single Point of Contact
North Carolina State Single Point of Contact
North Dakota State Single Point of Contact
Ohio State Single Point of Contact
Oklahoma State Single Point of Contact
Oregon State Single Point of Contact
Pennsylvania State Single Point of Contact
Rhode Island State Single Point of Contact
South Carolina State Single Point of Contact
South Dakota State Single Point of Contact
Tennessee State Single Point of Contact
Texas State Single Point of Contact
Utah State Single Point of Contact
Vermont State Single Point of Contact
Virginia State Single Point of Contact
Washington State Single Point of Contact
West Virginia State Single Point of Contact
Wisconsin State Single Point of Contact
Wyoming State Single Point of Contact

Ms. Joy Alford
Dr. Christian Barbier
Kenneth J. St. Mary
Mr. Dennis Potter
Dr. Peter Wilkniss

Air Pollution Control Association
American Association for the Advancement of Science
American Conservation Association, Inc.
Center for Law and Social Policy
Chamber of Commerce of the U.S.A.
Conservation Foundation
Dames & Moore
Ecological Society of America
Environmental Action Foundation
Environmental Action, Inc.
Environmental Defense Fund
Environmental Law Institute
Environmental Policy Institute
Federation of American Scientists
League of Women Voters of the U.S.
National Audubon Society
National Trust for Historic Preservation
National Wildlife Federation
Natural Resources Defense Council, Inc.
Sierra Club
Wilderness Society, The

7.0 INDEX

A

Adverse impacts 4-6, 4-31
Air quality 3-1, 3-3, 3-6 – 3-7, 3-10 – 3-11, 4-13, 4-15
Airlock 2-5, 2-8, 2-10, 2-28
Assembly sequence 2-15 – 2-16, 4-6

C

Columbus Attached Laboratory 2-5, 2-13
Columbus Free Flying Laboratory 2-1 – 2-2, 2-13
Columbus Polar Platform 2-13, 2-16, 2-21
Cultural resources 4-30 – 4-31

D

Dual Keel 1-1

E

Ecology 4-19, 4-28

F

Flight Telerobotic Servicer 2-5, 2-10

G

Goddard Space Flight Center 2-21, 3-8 – 3-9, 4-23
Greenhouse effect 3-1, 3-4

H

Habitation Module 2-1 – 2-2, 2-4 – 2-5, 2-28, 2-31, 2-33, 4-14
Hazardous waste 2-33, 4-8, 4-13

I

Ionosphere 2-33, 3-1, 3-5, 4-16, 4-18 – 4-19, 4-31

J

Japanese Experiment Module 2-5, 2-16, 2-28
Johnson Space Center 2-21, 3-7 – 3-8, 4-21 – 4-22

K

Kennedy Space Center 2-16, 2-21, 2-27, 2-33, 3-11 – 3-12, 4-7 – 4-8, 4-13, 4-25 – 4-26, 4-28, 4-31

L

Leakage 2-33, 4-8, 4-16, 4-20, 4-27
Lewis Research Center 3-9 – 3-10, 4-24

Logistics Carriers 2-5, 2-8, 4-7 – 4-8

M

Man-Tended Approach 2-27, 2-29, 2-31, 2-33 – 2-34, 4-27
Marshall Space Flight Center 2-21, 3-6 – 3-7, 4-21
Mesosphere 3-1, 3-5, 4-15
Mobile Servicing System 2-10 – 2-11

N

Natural resources 3-5, 4-30
Noise 4-18 – 4-19, 4-28

O

Orbital debris 4-1 – 4-2, 4-4 – 4-5
OSHA 4-20
Outgassing 2-33, 4-16, 4-18 – 4-19
Ozone 3-1, 3-4 – 3-5, 3-12, 4-15 – 4-16

P

Payload operations 2-21, 4-7, 4-27
Power Tower 1-1, 2-1, 2-23, 2-27, 2-31, 2-33 – 2-34, 4-26
Propulsion system 2-10, 4-2, 4-4, 4-16, 4-31

R

Radioactive wastes 4-13
RCRA 4-8, 4-13
Re-entry 4-4 – 4-5, 4-28
Resource Nodes 2-5

S

Socio-Economic 3-7 – 3-12, 4-20, 4-27, 4-29
Solar Power Module 2-10
Stratosphere 3-1, 3-4 – 3-5, 4-15 – 4-16

T

Toxic materials 4-7 – 4-8, 4-13 – 4-14
Transportation 2-21, 2-31, 3-1, 3-4, 3-6, 4-13, 4-15, 4-19 – 4-20, 4-28, 4-30
Troposphere 3-1, 3-4, 4-15
Truss Assembly 2-2, 2-10

U

U.S. Laboratory Module 2-2 – 2-3, 2-5, 2-13, 2-21, 4-7 – 4-8, 4-14
U.S. Polar Orbiting Platform 2-13, 4-15 – 4-16

V

Vandenburg Air Force Base 2-13, 2-16, 2-27, 3-12 – 3-13, 4-26, 4-31

W

Waste materials 2-28, 4-7 – 4-8
Water quality 3-9, 3-11 – 3-12, 4-19
Work Packages 2-16, 4-20 – 4-25, 4-27, 4-29

APPENDIX A

Definitions

Attached Payloads

Payloads located on the Space Station structure (truss) outside the pressurized modules.

Automation

The operation or control of a process, equipment, or a system in a manner essentially independent of external influence or control; the condition of being automated.

Checkout

Test activities that verify the readiness of hardware and/or software for its intended use.

Co-Orbit or Co-Orbiting

In the same, or nearly the same orbit as another object,particularly with respect to the orbit period. To orient so as to require very little final control velocity such as to execute a rendezvous, docking, berthing, or tending mission.

Note:

In the strictest sense, two co-orbiting objects would be coincident. In practice, and in any context associated with the Space Station Program, a co-orbiting object would have the same period, eccentricity, ascending node and argument of perigee; but would be at a slightly different right ascension (i.e., stable station-keeping ahead of, or behind the Space Station).

Co-Orbiting Platforms

A space platform with the same average orbital period, inclination, and node as the Space Station, and maintaining its orbit path along that of the Space Station.

Configuration

(1) The arrangement of an information system as defined by the nature, number, and chief characteristics of its software and/or hardware functional units. (2) The requirements, design, and implementation that define a particular version of a system or system component. (3) The functional and/or physical characteristics of hardware/software as set forth in technical documentation and achieved in a product.

Consumables

The materials that are expended during the course of meeting operational objectives.

Note:

Unused consumables may be considered accountable and recoverable. Generally; "consumables" does not apply to the wear out of system components. See EXPENDABLES.

Contamination

Any effect arising from the induced environment gaseous, particulate, or radiation background that interferes with or degrades the results of the intended measurement or that degrades Space Station component and payload experiment hardware such that refurbishment is required before continued use.

Critical Design Review (CDR)

A review conducted for each configuration item when detailed design is complete to (1) determine that the detailed design of the configuration item satisfies performance and engineering specialty requirements of the development specifications; (2) establish the detailed design compatibility among the configuration item and other items of equipment, facilities, software, and personnel; (3) assess configuration item risk areas on a technical, cost, and schedule basis; (4) assess results of the procurability analyses conducted on system hardware; and (5) review the preliminary hardware product specifications.

Critical Item

A single failure point and/or a hardware item(s) (including redundant items) in a life or mission-operations-essential application which does not meet the program failure tolerance requirements or where item(s) cannot be checked out prelaunch or in orbit, loss of an item(s) is not readily detectable by the flight or ground crew during any mission phase, or loss of an item(s) is not capable of restoration on-orbit.

Design Requirement

Any requirement that impacts or constrains the design of a system or system component; for example, functional requirements, physical requirements, performance requirements, development standards, and product assurance standards.

Docking

The process of making physical contact and joining two spacecraft. One or both can be actively controlled using translational or rotational maneuvers.

Expendable Launch Vehicle (ELV)

A ground-launched propulsion vehicle, capable of placing a payload into Earth-orbit or Earth-escape trajectory, whose various stages are not designed for, nor intended for recovery or re-use.

Note:

The final stage(s) of an expendable vehicle may remain in orbit with the payload(s) unless they are provided with special de-orbiting systems.

Expendables

Items or materials that are used during the course of an operational activity. Expendable items, when issued, are dropped from the property accountability system and are considered unrecoverable. See CONSUMABLES.

Experiment

That assembly of hardware, software, and operations, in space and on the ground that enables the user to meet the intended research objectives.

Note:
An experiment could include one or more payloads, delivered on one or more STS flights. Alternatively, one payload could encompass a number of individual experiments.

Extravehicular Activity (EVA)

Operations performed by crew members wearing space suits outside the habitable environment.

First Element Launch (FEL)

The first assembly flight of the Space Station Program, including structure and those subsystems necessary to sustain the initial Space Station until additional hardware is placed in orbit.

Flight Telerobotic Servicer (FTS)

A device attached to a Space Station manipulator or the Orbital Maneuvering Vehicle which interfaces with the payloads located on the Space Station, or with payloads located on platforms or free-flyers in order to allow servicing to be performed in-situ.

Full Time Equivalent (FTE)
One man-year, or 2080 hours of labor per year.

Integration

The process of combining software elements, hardware elements, operations, networks, personnel, and procedures into an overall system or operation.

International Partner

Any of the non-U.S. countries or agencies participating and sharing in the design, development, and operation of the Space Station: National Research Council of Canada, National Space Development Agency (NASDA) -- Japan, and the European Space Agency (ESA).

Japanese Experiment Module (JEM)

The Japanese-provided laboratory module (including an Experiments Logistics Module) that is part of the baseline station configuration.

Logistics

The management, engineering, and support activities required to provide personnel, materials, consumables and expendables to the Space Station elements reliably and in a cost-effective manner.

Maintainability

The ability of the Space Station systems to be maintained. The probability that an item can be restored to or retained with acceptable performance limits.

Manifesting

The process of defining what materials will be physically exchanged between the ground and space elements of the program, and when and how those transfers will be scheduled and implemented.

Manned Base

Major, manned element of the Space Station Program providing permanent manned presence in space. The manned base includes all the U.S and partner provided manned elements and all the related systems and structure.

Man-Tended Capability (MTC)

The capability to operate the Space Station unmanned except for periodic visits by Shuttle crew for servicing and maintenance.

Mature Operations Phase

The continuous period of activity commencing with the establishment of that configuration of the Space Station that provides a permanently manned capability in space, and continuing there after throughout the lifetime of the program. Mature operations will embody the management and operation of all subsequent growth and evolution.

Module

Major elements of the Manned Base including: The Habitation Module, the U.S. Laboratory Module, the Japanese Experiment Module, and the Columbus Module.

National Space Transportation System (NSTS)

The Shuttle program and its supporting elements.

Orbital Replacement Unit (ORU)

The lowest level of component or subsystem hardware that can be removed and replaced on location under orbital conditions.

Payload

An aggregate of instruments and software for performance of specific scientific or applications investigations, or for commercial production. A specific complement of instruments, space equipment, and support hardware carried into space to accomplish a mission or discrete activity in space.

Note:
- Payloads may be internal to pressurized modules, attached to the station structure, attached to a platform, or they may be free-flyers.

- A payload may be designed to be re-used either by return to the Earth's surface for refurbishment and re-launch, or by applied in-space services.

Permanent Manned Presence

That point in the development and operation of the Space Station Program where the configuration of the manned base is capable of supporting man's presence on a continuous basis with only the incremental presence of the Shuttle.

Note:
The capability to provide permanent-manned-presence does not mandate continuous manning (or permanent manning) which is, nonetheless, an inherent capability within the provisions of a permanent manned capability.

Permanently Manned Capability (PMC)

The capability to operate the Space Station with a human crew on board, 24 hours a day, 365 days a year.

Platform

An unmanned orbital element of the Space Station Program that provides standard support services to payloads not attached to the Space Station.

Polar Orbiting Platform (POP)

An unmanned spacecraft in polar or near polar inclination operated from the ground and dependent on the Space Station Program to provide services for a complement of payloads.

Preliminary Design Review (PDR)

Review conducted for each configuration item or aggregate of configuration items to (1) evaluate the progress, consistency, technical adequacy, testability, and risk resolution (on a technical, cost, and schedule basis) of the selected design approach; (2) determine its compatibility with performance and engineering specialty requirements of the development specification; (3) establish the existence and compatibility of the physical and functional interfaces among the configuration item and other items of equipment, facilities, computer software, and personnel; and (4) review the preliminary version of the operation and support document.

Program Requirements Review

Provides a critical review and assessment of the Level I requirements stated in the PRD, the Level II requirements stated in the PDRD, and necessary lower level requirements to assure complete and consistent specification of program requirements, including those whose satisfaction necessitates resources or capabilities outside direct control of the Space Station Program; traceable satisfaction of high level requirements and constraints on the program; and elimination of requirements for which there is no need.

Reboost

Raising the Space Station's orbital altitude to compensate for the effects of atmospheric drag or station-induced factors such as propulsive venting. Accomplished using Space Station propulsion with discrete burns at regular intervals.

Space Station Freedom Program

The aggregation of U.S. and international partner space projects, space craft, space systems, and ground systems generally associated with the development and operation of, and encompasses within the interface specifications for, a permanent Manned Base and Space Platforms, and whose development and operation and funding are managed by NASA and the international partners.

APPENDIX B

References

1. The White House, Office of the Press Secretary, "Presidential Directive on National Space Policy," February 11, 1988

2. The National Aeronautics and Space Act of 1958, (Pub. L. 85-568) as amended, 42 U.S.C. 2451, et seq.

3. NASA "1986 Long-Range Program Plan," August 1985

4. NASA, Space Station Program Office, "Space Station Program Definition and Requirements Section 6. Function and Resource Allocation" Rev. D, September 30, 1988

5. NASA, "Space Station Reference Configuration Description," August 1984

6. NASA, "Space Station: A Man-Tended Approach," Space Station Program Office, April 1986

7. World Meteorological Organization, "Global Ozone Research and Monitoring Project-Report Number 16 Atmospheric Ozone 1988" Vol. III

8. National Research Council, "Changing Climate" Report of the Carbon Dioxide Assessment Committee, 1983

9. NASA, "Present State of Knowledge of the Upper Atmosphere 1988: An Assessment Report," Watson, R.T., Prather, M, and Kurylo, M. J., Washington, DC, June 1988

10. Brasseur, G. and Solomon, S., "Aeronomy of the Middle Atmosphere," 1984

11. Kasha, M.A., "The Ionosphere and Its Interaction with Satellites," 1969

12. Hanson, W. B., "Structure of the Ionosphere," Satellite Environment Handbook, Stanford University Press, Stanford, CT, 1961

13. McDonnell Douglas Preliminary Estimate - October 1988

14. NASA, "Environmental Resources Document - George C. Marshall Space Flight Center," November 1980

15. NASA, "Environmental Resources Document for the Lyndon B. Johnson Space Center," November 1980

16. NASA, "The Goddard Space Flight Center Environmental Resources Document," January 1986

17. NASA, "Environmental Resources Document for the Lewis Research Center," May 1983

18. NASA, "Environmental Resources Document for the Kennedy Space Center," November 1986

19. NASA, "Final Environmental Impact Statement for the Ulysses Mission (Tier 2)," June 1990

20. Department of the Air Force "Environmental Assessment - Titan IV Space Launch Vehicle Modification and Operation," Vandenberg Air Force Base, CA, February 1988

21. Kessler, Donald J., Reynolds, Robert C., and Anz-Meador, Phillip, "Orbital Debris Environment for Spacecraft Designated to Operate in Low-Earth Orbit," NASA TM 100-471, NASA Johnson Space Center, Houston, Texas, April 1989

22. NASA, Space Station Program Office, "Space Station Program Definition and Requirements Section 3: Space Station Systems Requirements," Rev. G, October 31, 1988

23. Loftus, J. P. Jr. et. al., "Decision Time on Orbital Debris," Aerospace America, June 1988

24. NASA, "Environmental Impact Statement, Space Shuttle Program," Washington, DC, April 1978

25. NASA, "Final (Tier 2) Environmental Impact Statement for the Galileo Mission," May 1989

26. NASA, Space Station Program Office "Program Requirements Document," February 24, 1988

27. Teledyne Brown Engineering and Boeing Aerospace Company, "Microgravity and Materials Processing Facility Study Data Release," Vol. III Appendix A February 2, 1987

28. NASA, Ames Research Center Space Station Projects Office "OSSA Space Station Waste Inventory," November 1986

29. NASA, "Environmental Impact Statement for the Kennedy Space Center, Final," October 1979

30. Murphy, G. B., "Contaminant Ions and Waves in the Space Station Environment," A Study of Space Station Contamination Effects, NASA Conference Publication 3002, 1988

31. NASA, "Baseline Configuration Document," Space Station Program Office, SSP30255 Rev. B, April 15, 1988

32. Bernhardt, Paul A., "Contamination of the Space Station Environment by Vented Chemicals," A Study of Space Station Contamination Effects, NASA Conference Publication 3002, 1988

33. Bernhardt, P. A. et. al., "Spacelab 2 Upper Atmospheric Modification Experiment Over Arecibo, 2, Plasma Dynamics," Astro. Lett. and Communications, 1988, TBP

34. NASA, "Space Station Program Natural Environment Definition for Design," Space Station Program Office JSC 30425, January 15, 1987

35. Bernhardt, P. A., Geophysical and Plasma Dynamics Branch, NRL, Washington, DC Personal Communication, September 1988

36. Chamber of Commerce, Huntsville, AL, September 1988

37. Chamber of Commerce, Houston, TX, September 1988

38. Chamber of Commerce, Huntington Beach, CA, September 1988

39. Chamber of Commerce, Camden, NJ, September 1988

40. Chamber of Commerce,King of Prussia, PA, September 1988

41. Chamber of Commerce, East Windsor, NJ, September 1988

42. Personal Communication, September 1988

43. Chambers of Commerce, Santa Clara County and Sunnyvale, CA, September 1988

44. Chamber of Commerce, San Diego, CA, September 1988

APPENDIX C

GROUND-BASED FACILITIES

The following list of ground-based facilities has been excerpted from the Space Station Freedom Facilities Review Panel (FRP) Final Report of December, 1988.

A. CATEGORY DEFINITIONS

The facilities reviewed by the FRP covered a broad range of activities. Grouping facilities into categories that parallel key program functions eliminates some of the difficulty in understanding similarities between facilities and their interrelationships (although the assignment of a facility to a specific category was difficult in some cases because the function of that facility overlapped multiple categories). Accordingly, the following categories were defined:

SOFTWARE DEVELOPMENT: Facilities in this category are used for software production, verification, and software simulation for hardware design/development. The scope of development may include, for example, the Space Station Information System (SSIS), Operations Management System (OMS), Technical Management and Information System (TMIS), and Data Management System (DMS). The diversity in facility support ranges from simple code development to the simulation of distributed systems.

ELEMENTS/SYSTEMS DEVELOPMENT: Design, fabrication, integration and testing are the capabilities provided by facilities in this group. As expected, a large number of test beds are found here. Typical hardware development may include the modules, racks, truss structures, and distributed system components. The facilities are primarily geared toward development, as opposed to operations, although some may be required to support sustaining engineering.

MOCK-UPS/SIMULATORS/TRAINERS: There is considerable overlap in these three areas. For example, mock-ups, simulators, and trainers can be used for crew training and hardware development, and a simulator or trainer can contain several mock-ups. A mock-up refers to a simulator or trainer that has a fidelity that may vary from very low (simple volumetric representation only) to very high (fully operational, flight-like representation). The fidelity of a mock-up is dependent upon when, where, and how it will be used to support a particular activity (concept development, engineering evaluation, crew training, etc.). A simulator is usually a high fidelity mock-up driven by real-time computer(s) that enable demonstration of an exchange of resources and simulation of a particular environment. The common thread that ties this group together is the man-in-the-loop requirement which is necessary for the proof-of-concept and crew training functions. Note that many of these facilities support element/system development extensively as well as procedures development and training functions.

HEALTH/SAFETY/CREW PRODUCTIVITY: This category is just what the name implies. Facilities here are focused on enhancing the health, safety and productivity of the crew members. The emphasis is not on crew training, but advancing the state-of-the-art in human performance and fitness.

AUTOMATION AND ROBOTICS TECHNOLOGY: Research in this category has been going on for some time, mainly through the Space Station Freedom advanced development program. Many of the facility capabilities are concentrated on the

Flight Telerobotic Servicer (FTS). Other capabilities are more generic in nature, aimed toward improving end-effectors and hand controllers. The grouping of facilities into this category instead of the Elements/Systems Development category was done because of the high visibility that automation and robotics receives throughout NASA; thus making it easier to highlight facilities associated with A and R technology.

MATERIALS TECHNOLOGY: Facilities in this category are commonly used for materials investigation, selection and qualification. The capabilities represented here are basic to any development program. There is a distinct difference between this set of facilities and those placed within the Elements/Systems Development category. Materials technology facilities frequently make use of test specimens for analysis and testing. On the other hand, hardware development facilities often times utilize the entire component, complete with all parts and subassemblies. As with other development phase facilities, some may be required during mature operations to evaluate materials used in experiments, payloads, or Space Station Freedom upgrades/improvements.

GROUND AND SPACE OPERATIONS: This category emphasizes station operations and its ground support. Facilities included here will probably be required to support Space Station Freedom for the life of the program.

B. FACILITIES BY CATEGORY

The following is a listing of all facilities by name, with a facility Identification Code in brackets. The code consists of a Center identifier and a facility designation number. The Center identifiers are as follows:

Identifier	Center
A	ARC
G	GSFC
J	JSC
JPL	JPL
K	KSC
La	LaRC
Le	LeRC
M	MSFC

Each facility is assigned to one of the function categories defined in the previous section. A brief description is provided showing how each facility is used to support Space Station Freedom development and/or operations. Locating facilities cross-referenced in the text is made easier through use of the Appendix on page 33. [The presence of an asterisk after a facility title indicates the use of Construction of Facilities funding.]

1. SOFTWARE DEVELOPMENT

Engineering Computation Facility - CYBER 830 and 840 * [J-19]: This facility will provide large code computational support to the engineering effort utilizing the CYBER 830 and 840 computer systems. This support includes NASTRAN analysis for structures; heat transfer and control systems analysis; plus math model development for DMS and a stand-alone, non-real-time station simulation. This facility also serves as host for the AC and S Test Bed (J-21).

Attitude Control and Stabilization (AC and S) Test Bed [J-21]: This laboratory will provide software models of proposed GN and C system components for early system definition and development. As flight hardware designs are finalized, the AC and S math models will be updated. During operations phase, the AC and S Test Bed will support assembly through vehicle dynamic modeling. This same dynamic modeling capability will be required to support evolutionary growth of Space Station Freedom. Unlike the GN and C Emulator Test Bed (J-01), this test bed is off-line for batch mode processing and is required for computationally intense GN and C analysis.

Data Management System (DMS) Test Bed * [J-22]: This facility is a distributed high fidelity DMS Test Bed to functionally integrate participating JSC systems test beds. It will also provide data communication and connectivity with other test beds in the SSIS network such as ESA and GSFC and will support developmental work in technical areas such as OMA conceptual definition activities as well as critical hardware (e.g., NIU) development and evaluation. This integrated test bed will support the investigation and validation of fundamental engineering and operations DMS concepts for use on Space Station Freedom.

Systems Operations Development Laboratory [J-43]: This Lab supports ground operations software applications prototyping such as display and control, fault detection, procedures interpreter, systems management, training software prototyping (ground and on-board), and hardware/software technology assessments and trade-offs.

Multi-systems Integration Facility (MSIF) * [J-44]: The MSIF will establish a high fidelity program level integration facility for the Space Station Freedom Program software to ensure developer systems are integrated, tested, and certified as flight ready. Products which will assist Space Station Freedom development are certified software flight loads and integrated software/hardware flight ready systems.

Software Support Environment (SSE) Development Facility * [J-45]: This facility will support the development and sustaining engineering for the Software Support Environment. The SSE, consisting of software life cycle tools, rules, and procedures, will be used across the program and through the life of the program for sustaining engineering of the Space Station Freedom Program Operational Software System.

Goddard Software Production Facility (GSPF) * [G-09]: This GSFC facility, located in the Customer Data Operations Facility (CDOF), will provide support for the development and maintenance of WP-03 software. It will operate a subset of software tools supplied by the SSE and support the implementation rules developed by the SSE.

Platform Data Management System Test Bed [G-15]: The Platform DMS Test Bed will be used by the WP-03 contractor to: (1) evaluate modifications required to common JSC DMS components for application to platform DMS; (2) check hardware and software interfaces as they are breadboarded so they can be checked out functionally; (3) test bus access protocols and associated data latencies; (4) test limited layer data management protocols for functionality; and (5) determine the impact of data system architecture on platform subsystems (e.g., the effect upon GN and C Control Loops, Command Security Processing and mass storage considerations).

Electric Power System Simulation Lab [Le-07]: The Electrical Power System Simulation Lab will be used to conduct supporting development tests of power system control software and to support the Software Integrated Test to be performed by the WP-04 contractor at LeRC. This software includes power system control algorithms and power system simulation for PV, SD, and hybrid configurations. It also can be used in evaluating the ADA Department of Defense software language for real-time power system control algorithms.

Kennedy Software Production Facility (KSPF) [K-07]: This KSC facility will support software development for integration and checkout tests from prelaunch to postlanding. It will also allow software to be produced to check Shuttle/Space Station Freedom payload interfaces.

2. ELEMENTS/SYSTEMS DEVELOPMENT

WP-01 Manufacturing and Assembly Building [M-01]: The WP-01 contractor will utilize MSFC Building 4708 for manufacturing and assembly operations and for administrative offices. It will also provide for meteoroid shield fabrication; module structural assembly and checkout; rack assembly and integration; tube and duct fabrication; and module integration assembly and checkout (IACO).

Core Module Integration Facility * [M-02]: During the development phase of the program, the facility will support ECLSS component and system level testing. This includes subsystem/system simulations, enhancements of existing hardware, and interface verification. This facility will provide for flight support activities such as maintenance/verification of subsystems, new module/node interface verification, growth subsystem use validation, Space Station Freedom future missions, and the troubleshooting of anomalies occurring in the flight system during the operations phase.

Process Materials Management System (PMMS) [M-03]: This facility supports the development testing of the Process Materials Management System , a subsystem of the U. S. Lab Module. The hazardous nature of the system operation is a key facility consideration. Tasks include, but are not limited to, development and test of safety operations/procedures; chemical and microbial assessments; data reduction and reporting; materials and equipment procurement and disposal; and facility validation testing, installation, buildup, integration, test modification, repair and removal. This effort will provide NASA with high fidelity PMMS test equipment that will be used to evaluate methods of handling hazardous substances on Space Station Freedom and to test payload accommodations.

Mechanisms Test Bed * [M-14]: This facility will be used for berthing mechanism dynamics and loads verification testing using a six degree of freedom motion simulator. The tests will be conducted for the purpose of developing components of the mechanism, such as alignment guides and capture latches, and to qualify the total berthing mechanism.

Audio/Video/Data Management System Breadboard [M-16]: This facility will be used to develop and maintain the capability to investigate and evaluate internal audio and video system components and concepts and their interfaces to the remainder of the system. This capability includes specialized test instrumentation for evaluating the performance of internal audio and video components, and includes equipment for simulating the interfaces between audio and video functions and the DMS with other interfaces. During the operational phase, the

facility will be used as needed to support troubleshooting and flight system upgrades.

Electrical Systems Breadboard * [M-17]: This facility will be used to test system distribution hardware (including load converters, load center switchgear, cabling, and rack interface hardware) and automated control hardware/software (including load center controllers/MDMs and the appropriate software) for use in higher fidelity module test equipment. This breadboard will identify/characterize component to component interactions for various load and source types, define module distribution operating modes, define the control of individual integrable racks within guidelines established by the WP-04 EPS controller, and define the automated operational interfaces to other functions and controls.

Dynamics Test Facility [M-18]: This facility supports vibration, modal and acoustics testing for the development and certification of WP-01 structures.

Structural Test Facility [M-19]: The facility supports static load, pressurization and functional testing of WP-01 structures.

Repair Technology Development Facility * [M-25]: This facility will be used to test materials and processing technology for on-orbit repair. It will simulate on-orbit conditions (television chamber). It will also test and develop repair methods using: (1) reaction injection molding; (2) fiber reinforced plastic foams; (3) a space-compatible welding/cutting system; and (4) a space-compatible plasma spray system for the repair of coatings.

Guidance, Navigation and Control (GN and C) Emulator Test Bed [J-01]: The GN and C Emulator Test Bed consists of functional math models of anticipated GN and C system components programmed on separate processors, connected together in a manner to represent the GN and C architecture. This test bed provides the tools required to evaluate redundancy of GN and C components and the real-time aspects of the GN and C system operating in a distributed environment. As the GN and C system design matures, the functional processing elements will be updated to be more representative of the flight system. During the operations phase, the test bed will be used to evaluate updates necessary due to technology growth and enhanced requirements. This test bed operates in an interactive or real-time mode and is interfaced with the DMS Test Bed (J-22).

Extra-vehicular Activity (EVA) Test Bed [J-02]: The EVA Test Bed will provide the Space Station Freedom Program with critical development and integrated system performance assessment. Primary goals of the EVA Test Bed include: the development of a system representative of the Space Station Freedom Extra-Vehicular Activity System; the provision of a mechanism by which advanced technology concepts are evaluated at the component and system level for EVA applications; and the provision of a facility for development, certification, acceptance, and pre-flight verification testing of the EVA hardware.

Thermal Systems Test Bed (TTB) * [J-03]: The TTB provides the Space Station Freedom Program with critical elements of thermal technology development and integrated system performance assessment. Primary goals of the TTB include: the development of a ground-based system representative of the Space Station Freedom Thermal Control System (TCS) to verify the readiness of two-phase thermal technology for use on Space Station Freedom; the provision of a mechanism by which advanced technology thermal control concepts are evaluated at the system

level for Space Station Freedom applications; and the provision of a facility for development and certification testing of the Space Station Freedom TCS hardware.

Large Man-rated Thermal Vacuum Chambers A and B * [J-04]: These facilities will be used to support tests which include manned EMU thermal/vacuum development and certification, integrated active thermal control system (including payload/module mechanical interfaces) thermal/vacuum development and certification, airlock certification, and numerous additional subsystems and pre-flight verification tests for other critical station mechanical systems.

Small Unmanned Thermal Vacuum Chambers * [J-05]: These facilities support the testing of component parts of the Space Station Freedom EMU active thermal control system and other thermal critical items that will be required during the development test period. Testing of thermal control subsystems with radiation heat transfer as allowed by these facilities is mandatory. A number of small vacuum chambers are available which allow unmanned vacuum testing.

Manned Vacuum Chambers (Bldg. 7) * [J-06]: The 8-ft., 11-ft., and 20-ft. Chambers and the Airlock Test Facility are used as follows: (1) the 8-ft. Chamber will be used to test a number of Portable Life Support System (PLSS) components requiring a combination of vacuum and canned man capability. Unmanned PLSS prototype verification and Unmanned PLSS certification will be supported. Acceptance of EMU's after fabrication and re-verification will be performed; (2) the 11-ft. Chamber supports manned verification of the Space Station Freedom prototype EMU. Additional flight units will require acceptance testing following fabrication, and periodic re-verification of flight EMUs is also expected; and (3) The 20-ft. Chamber will have an Airlock Test Facility and support man-rating of airlocks and airlock systems verification of airlock system procedures, crew training in EVA systems and mission testing.

Addition to Antenna and Tracking Development Lab * [J-07]: This facility will provide laboratory space and test facilities to accomplish antenna and communications equipment development, fabrication, testing and certification for numerous Space Station Freedom hands-on engineering tasks related to electro-optical tracking, communications, and robotic sensor systems.

Tracking Systems Test Bed [J-08]: The Tracking Systems Test Bed will support the development, verification and operational support of the Global Positioning System (GPS). JSC personnel will utilize the facility to evaluate candidate hardware and software approaches to GPS operations, develop receiver performance simulations, define critical design parameters and provide GPS/Shuttle flight experiment hardware. The WP-02 contractor will use the same facilities to test prototype designs and to perform final system verification testing.

Anechoic Chamber/Near Field Antenna Facility * [J-09]: This facility will test first small-scale model antennas for preliminary design values to support the antenna Preliminary Design Review (PDR); incrementally test full scale early development models and successive developmental changes; test full scale prototype and final developmental protoflight models in support of the Critical Design Reviews (CDR's) and design freeze. The facility will also test and determine the exact performance values of flight antennas for flight certification prior to delivery for Space Station Freedom installation and produce Radiation Distribution Plots (antenna patterns).

Radio Frequency Communications Lab [J-10]: This lab provides supporting development and design verification for RF communications systems such as Multiple Access Communications, EVA Communications, and Emergency S-band. Activities include basic breadboard design, development and test; component development and test; interface tests; evaluation of design changes; e.g., alternate frequency bands, and verification testing of final hardware implementations. The lab includes microwave design capabilities as well as fabrication and test facilities. This facility provided the above type support to Shuttle antenna development and is currently supporting development of new (Block II) replacement antennas.

Electromagnetic Interference (EMI) Test Facility [J-11]: This lab will perform electromagnetic interference and susceptibility tests and evaluations on spacecraft developmental hardware and flight hardware. The lab includes unique test equipment, and trained engineering and technician personnel for conducting flight hardware EMI certification, EMI anomaly investigation, verification of shielding effectiveness, and analysis of potential electromagnetic compatibility (EMC) problem areas. This facility currently performs the above functions for the Shuttle and on-board Shuttle flight experiment packages and DOD flight-added equipment.

Electronic Systems Test Laboratory (ESTL) * [J-13]: The function of the ESTL is to take developmental C and T hardware (breadboards and prototype boxes) during their evolutionary development phases and place them operationally into the "systems level" environment in which they must successfully operate. This results in identifying major and minor system design and operational problems very early in the developmental stages when design changes are inexpensive to make. The ESTL has all the RF links for the Shuttle Program (Ground Station, TDRSS, Orbiter, EVA, payloads) generated by actual flight or protoflight equipment therein.

Flight Telecommunications Development Facility [J-14]: This facility will support the development and test of critical subsystem components for video, audio and signal processing to include definition of: (1) critical areas of system interaction; (2) needed refinements to ACD's; and (3) network end-to-end integration for space-to-space and space-to-ground development.

Communications and Tracking (C&T) Control and Monitoring System (CMS) Test Bed [J-15]: The CMS Test Bed will be used to support the design, development and evaluation of Space Station Freedom C and T systems status monitoring, and control and resource management techniques using expert systems hardware/software technology. The CMS test bed capability will use prototype flight processors, network interface units, mass storage devices, fiber optic networks and associated software in a breadboard test environment. The capability to interface the CMS test bed with other C and T subsystems breadboards and the DMS/OMS test beds will be established.

The Space Systems Automated Integration and Assembly Facility (SSAIAF) * [J-16]: This facility is a planned in-line support laboratory for the work package contractor and will be used to perform dynamic testing of docking/berthing devices, assembly sequence procedures development and fit-check verification, and automation/robotics development and evaluation. Early development activity is needed in support of the work package contractor requirements. It will provide a capability for mechanical systems integration and testing and provide a capability for real-time mission support of on-orbit assembly. Tests in this facility will be

performed to develop optimum procedures for construction, inspection, maintenance and repair activities.

Electric Power Distribution and Control (EPDC) Lab/Test Bed [J-20]: This laboratory will provide a facility to support development and operational phases of the EPDC/Data Management System interface. A minimum EPDC breadboard with work stations will be developed and interfaced with the DMS.

Avionics Engineering Laboratory * [J-23]: This facility will be used to support hardware/software flight design and integration verification testing representing the Shuttle-to-Space Station Freedom configuration. The existing facility presently supports, and is funded by, the National Space Transportation System.

White Sands Test Facility (WTSF) Propulsion Test Area [J-24A]: The WP-02 contractor has proposed to utilize the Propulsion Test Area for development, qualification, and operational support testing of the Space Station Freedom integrated propulsion element.

Thermochemical Test Area [J-25]: This test area will be used for testing of propulsion, fluids and utilities components and system breadboards to provide support for the WP-02 development effort and to flight operations.

Structures Test Lab [J-27]: This lab will support mechanical properties tests, including fatigue and crack growth properties, on materials at room temperature and high and low temperatures and structural development and verification tests on Space Station Freedom components and structural assemblies.

Dynamic Structural Testing [J-28]: The Vibration and Acoustics Test Facility and the Dynamic Docking Test Facility will support hardware development and verification; perform model, vibration and acoustic testing to verify math models and structural integrity for launch conditions; verify math models and evaluate structural borne vibrations and acoustics for on-orbit conditions; and perform docking tests to support the development and verification of docking/berthing mechanisms.

Graphics Analysis Facility [J-36]: The Graphics Analysis Facility performs systems engineering analyses of man-machine interfaces, flight operations, vehicle and payload design, and mission planning via customized, interactive, 3-D computer graphics packages (PLAID/TEMPUS). The unique man-modeling software, which augments the analysis capabilities, is continually being enhanced with new technologies and an expanding anthropometric data base. The facility also supports the Space Station Freedom Flight Telerobotics Servicer program.

Food Systems Engineering Facility [J-37]: This facility will be used for food system component testing and evaluation, the development of a crew training program for food system operations and food provisioning, consisting of the flight food, its packaging and all accessory items for preparing and serving it. During the operational phase, this facility will provide sustaining engineering and technology enhancements to the food systems and provide crew member orientation and training in food system procedures and operations.

Instrument Thermal Test Bed (ITTB) [G-04]: The Instrument Thermal Test Bed is a full scale test facility that will permit the ground testing, qualifying and certifying of new, two-phase thermal technology for Space Station Freedom applications. The ITTB can provide a realistic simulation of the attached payload and/or platform

thermal environment. A variety of cold plates, condensers, heat exchangers, and similar equipment can be accommodated. The ITTB can operate in either a pure capillary, mechanically-pumped or hybrid mode. The thermal capacity is over 12 kilowatts and the transport length can be either 10, 20 or 30 meters. In addition to accommodating a wide variety of equipment, the ITTB is designed to be very flexible and permit hybrid reconfigurations.

Spacecraft Systems Development and Integration Facility/Integration, Test and Verification Facility - Attached Payload Accommodations Equipment (SSDIF/ITVF - APAE) * [G-07]: This facility, located in the Spacecraft Systems Development and Integration Facility (SSDIF), will support Integration, Test and Verification for WP-03 Attached Payload Accommodations equipment and user needs. Services will be provided for integrating, testing and verifying the interfaces, training and operation of payloads with the APAE. It will be used to define interfaces during the breadboard stages and then transition into an operational system to support anomaly isolation/correction, the development of operation procedures, training and the evaluation of enhancements.

Spacecraft Systems Development and Integration Facility/Integration, Test and Verification Facility - Platforms (SSDIF/ITVF - Platforms) * [G-08]: This facility, located in the SSDIF, is required to support Integration, Test and Verification for WP-03 platform elements and user needs. An integration facility with platform capabilities will integrate platform subsystems and payloads into the Space Station Freedom network for future missions. The ITVF will also have the capability to verify platform interfaces, support anomaly isolation/correction, the development of operation procedures, training and the evaluation of enhancements.

Development, Test and Evaluation Facility [G-12]: This facility will support the development of the test and evaluation of the demonstration test flight equipment and the Flight Telerobotic Servicer flight elements. Further, it will be used to develop associated procedures, techniques and scenarios, in addition to supporting training, end-to-end tests, anomaly investigations and enhancement development. The test facilities include Thermal Vacuum, RFI/EMI, Vibration and Static Loads.

Environmental Chamber B-2, Plum Brook [Le-01]: The Environmental Chamber will be used to support WP-04 contractor tests of the Solar Dynamic Receiver and Power Conversion Unit under thermal/vacuum conditions. It will not be required if Le-02 (Tank 6) is available to the program.

Environmental Chambers - Tanks 5 and 6 [Le-02]: Tank 5 will be used to conduct supporting development tests and support WP-04 contractor tests of photovoltaic solar array panels. These tests will evaluate the interaction of plasma with the array panels. Tank 6, after modifications, will be used to conduct supporting development tests of an advanced development solar dynamic receiver and to support WP-04 contractor tests of the Solar Dynamic Receiver and Power Conversion Unit. These tests will evaluate the performance of the systems under thermal/vacuum conditions.

Power Management and Distribution (PMAD) System Test Bed [Le-03]: The purpose of the PMAD System Test Bed is to conduct supporting development tests that include the testing, control, and operation of a single channel of an integrated PMAD System Test Bed. Specific tasks include: the demonstration and test of the source conversion and load conversion hardware; verification of the proper operation of the power management processor, power source controller, power

distribution controller and main bus switching controller with the Power Distribution and Control Unit (PDCU) and Main Bus Switching Unit (MBSU); and the verification and demonstration of the ring bus protection system for hard and soft faults including the classification of faults and reconfiguration of loads.

Space Power 20 KHz Test Bed Facility [Le-04]: The Space Power 20 KHz Test Bed Facility is used to conduct supporting development tests of a 20 KHz breadboard system. This includes source inverters, load converters, distribution system components and cabling, and computer controls.

Power Systems Facility (PSF) * [Le-05]: The PSF will be used to support experimental evaluations in a test bed of alternating current distribution systems and system control concepts and architectures for the Space Station Freedom Electrical Power System. This will include PMAD and energy storage system supporting development tests and the support of WP-04 contractor tests of the PMAD system. Also included is optical evaluation testing of the Advanced Development Solar Concentrator. The PMAD test bed will consist of solar arrays and/or solar array simulators, representative loads, candidate storage systems, power management and distribution, protection, and control systems. The test bed will be supported by subsystem and component test laboratories.

Nickel-Hydrogen (NiH_2) Cell Test Bed [Le-06]: The nickel-hydrogen cell test bed is used to conduct supporting development tests of NiH_2 cells. These will provide lifecycle data on NiH_2 cells prior to CDR and input to cell component evaluation and selection prior to First Element Launch.

Space Power Facility, Plum Brook * [Le-08]: This facility will be used to test large Space Station Freedom structures, including antennas and solar-powered panels to validate future growth configurations and to verify the control of flexible structures design and develop methods for automation/assembly. The existing Space Power Facility will be used to support the experimental evaluation of electrical power system integrated assemblies for Space Station Freedom. This will include WP-04 contractor tests of the photovoltaic module.

Rotary Joint Fluid Transfer Test Bed [La-05]: This facility will be used to perform development tests using anhydrous ammonia on candidate fluid coupler design and to qualify fluid couplers for fluid proof loads and life.

Structures Laboratory [La-06]: The structures laboratory is used to develop a broad range of structural concepts, including erectable Space Station Freedom trusses, deployable mechanisms, mobile remote manipulator systems, and automated structural assembly techniques. The Space Station Freedom hardware developed in this facility is applicable to the Phase I, Phase II, and evolutionary concepts.

Neutral Buoyancy Test Facility (NBTF) * [A-01]: The NBTF employs an 11 ft. diameter, 9 ft. deep tank to evaluate new space suit and end-effector technology. Under future-year funding, it will be relocated to the Human Performance Research Laboratory and enlarged to permit the early evaluation of technologies critical to the timely evolution of equipment and procedures for future zero-g extra- and intra-vehicular activities. The relocated NBTF will support full-range-of-movement video recording and motion analysis.

3. MOCK-UPS/SIMULATORS/TRAINERS

Payload Operations Training Facility (POTF) [M-08]: The POTF will provide for the development, maintenance and verification of payload operations training, including hardware and software that will support the training of payload crew, POIC personnel, experimenters and users. This facility will provide both Space Station Freedom data as well as training.

One-g Mock-up * [M-09]: This facility will be used for the design, development and evaluation of distribution systems routing and utility access, direct-mounted equipment locations and human factors assessments.

Neutral Buoyancy Simulator Facility [M-10]: This facility will be used to assess zero-g design impacts upon WP-01 elements. Development testing of Space Station Freedom assembly operations is planned, along with repair techniques, element interfaces, and Orbital Replacement Unit (ORU) servicing requirements.

Communications Systems Simulation Laboratory (CSSL) [J-12]: The CSSL is the primary facility for the simulation and analysis of Space Station Freedom communications links with the TDRSS, Shuttle, EVA's, OMV, MSCS, free-flyers, etc. Use of the CSSL includes system design, design verification/optimization, derivation of system specifications, flight-hardware performance predictions, anomaly investigations and mission-dependent operational performance predictions. The CSSL contains the computer-aided analysis tools which will be used to provide end-products for three C and T in-line tasks: (1) compatibility analysis; (2) circuit margin analysis; and (3) RF coverage analysis.

Systems Engineering Simulator (SES) Station/On-orbit Simulator * [J-18]: The SES will be used by the WP-02 contractor and is required to provide a real-time man-in-the-loop simulator supporting Space Station Freedom. The simulator will provide the base for the evaluation of development and operational issues concerning proximity operations with the Shuttle, MMU modules, OMV, OTV, and other free flyers with Mobile Service Center operations. The simulator includes a computer complex, Orbiter and MMU crew stations, all complete with visual displays shared with Shuttle simulators and functional representations of workstations.

Neutral Buoyancy Laboratory (NBL) * [J-38]: The NBL will be a large neutral buoyancy simulation facility that will provide the mandatory capability to support EVA activities associated with the large-scale on-orbit construction, verification, crew training, and mission operations. Products are Engineering Evaluations, Procedures Verifications, EVA Training and Real-Time Mission Support.

Space Station Mock-up and Trainer Facility (SSMTF) * [J-39]: The purpose of the SSMTF is to provide one-g mock-ups and trainers, a mobile remote manipulator system and other associated facilities in support of the Space Station Freedom Program. The function of this facility is to support engineering development and integration of hardware and systems; support training for flight crews, flight controllers and instructors; support real-time flight operations; and support NASA Public Affairs Office activities. Included in this facility are the following: the Man-tended/Permanent Manned Presence (MT/PMP) mock-up which is composed of the Habitation, JEM, ESA and four node modules; the Mobile Remote Manipulator Development Facility (MRMDF); and part-task mock-ups and trainers as required. The SSMTF, along with the NBL and WETF, comprise the Manned Systems Integration Test Bed.

Weightless Environment Training Facility (WETF) [J-40]: The WETF provides neutral buoyancy simulator support for engineering evaluations, EVA flight procedure development and validation and crew training, pending the availability of the NBL facility at JSC. An operational STS Remote Manipulator System (RMS) is installed in the WETF. The WETF neutral buoyancy simulators are an integrated element within the JSC task of flight procedure development, crew training and evaluation of astronaut interface hardware designs.

Space Station Training Facility (SSTF) * [J-41]: This planned facility supports ground training applications software development; manned base training for crew and ground support personnel; integrated operations training for systems and payloads; flight and ground procedures verification; flight software verification; and SSIS network simulation.

Spacecraft Systems Development and Integration Facility/Integration Test and Verification Facility - Robotics Assembly and Servicing Simulation Facility (SSDIF/ITVF - RASSF) * [G-05]: This Robotics Assembly and Servicing Simulation Facility (RASSF), located in the SSDIF, provides support for the WP-03 Flight Telerobotics Servicer and servicing simulation elements and user needs. It provides a ground system that uses FTS, attached payload and supporting element models for the evaluation and development of Phase I Assembly and Servicing. Further, the facility will be used to support anomaly isolation/correction, the development of verification of operations procedures, the evaluation of enhancements, and training.

Payload Accommodations Assessment Facility [La-03]: This facility will be used to analytically provide timely and rapid evaluation of the ability of Space Station Freedom to accommodate payloads, the impact that the operation of individual or sets of payloads would have on Space Station Freedom or other payload operations, and the impact that off-nominal operations would have on payload operations.

4. HEALTH/SAFETY/CREW PRODUCTIVITY

Medical Operations and Research Building. * [J-29]: This facility will house the medical operations and research laboratory space needed for the accomplishment of biomedical operational and research medicine programs required for the support of Space Station Freedom crew certification, flight preparation, health maintenance and monitoring, and baseline collection and analysis. It is required to support Extended Duration Crew Operations (EDCO) and the Health Maintenance Facility (HMF).

Human Computer Interaction Laboratory [J-32]: The Human Computer Interaction Laboratory defines requirements for optimized interactions between humans and computers, including display content and format, control type, use of text and graphics, and workstation design. The Laboratory uses state-of-the-art components and performs evaluations of conceptual designs, conducts research on these topics and applies research results to on-going programs.

Lighting Laboratory [J-33]: The Lighting Laboratory performs analyses of factors relevant to the astronauts' visual environment. Special equipment is employed to assess ambient and special lighting needs, reflective and transmissive characteristics of materials, payload/vehicle reflectors and running lights, and IVA/EVA operations lights. The Laboratory defines requirements and evaluates design concepts for

lights, alignment aids, docking targets, etc., for on-going programs. The Laboratory also performs research to take advantage of new technologies applicable to the visual environment.

Anthropometric Biomechanics Lab [J-34]: The Anthropometrics and Biomechanics Laboratory will quantify human performance capabilities under shirt-sleeved and space-suited conditions. The Laboratory measures strength and motion in one-g and simulated zero-g conditions (via neutral buoyancy and Keplerian flight) and is preparing for measurement in true zero-g spaceflight. The Laboratory also measures static and dynamic anthropometry to complement developing the capability for laser-mapping the body. The impact of human performance on vehicle design is identified in special tests, which are coordinated with design personnel. The laboratory research results are disseminated to design personnel and are input to the computer man-modeling efforts conducted by the Graphics Analysis Facility.

Human-Interactive Systems Test Bed (HIST) [A-03]: The Human-Interactive Systems Test Bed (HIST) will be used to develop and validate technologies for optimum human interaction with complicated automated systems. The HIST will also be used to develop guidelines for evaluating crew productivity and for optimizing overall system reliability, including the human element. Located in the highbay area of the Human Performance Research Laboratory, the HIST will include mock-ups of Space Station Freedom pressurized modules and of ground facilities such as the Principal Investigator and Ground Control stations. It will include a computational system modeled after the Space Station Freedom Software Support Environment and consisting of workstations, VAX-class processors, as well as other Data Management System and Operations Management System hardware and software characterizing the Block I and II SSIS environments.

5. AUTOMATION AND ROBOTICS TECHNOLOGY

Robotics Facility (Flat Floor) * [M-15]: This facility will support testing and evaluation of Space Station Freedom modules which will include test equipment, manipulators, and end effectors needed to evaluate flight hardware.

Advanced Systems Development Laboratory (ASDL) * [J-17]: The Advanced Systems Development Laboratory (ASDL) will provide analytical and test bed support for the development of Displays and Controls Workstations and manipulator systems. Integration of these systems and integration with the DMS Test Bed will also be provided. Eventually, expert systems applications will be integrated and evaluated. The capability is provided to evaluate the Multi-purpose Applications Console which supports subsequent utilization in the Systems Engineering Simulator proposed by the WP-02 contractor.

Man-systems Telerobotics Lab [J-35]: The Man-systems Telerobotics Laboratory will perform research concerning the human interfaces with manipulator/telerobotic/robotic systems across a wide spectrum of system capabilities (i.e., manual control to supervisory control). The Laboratory supports development of the Flight Telerobotics Servicer program and provides man-machine requirements, conceptual design inputs, and design evaluations for telerobotics workstations, robot design and robot sensor systems (e.g., vision, proximity, force).

Development, Integration and Test Facility (DITFAC) * [G-11]: This facility will allow the performance of engineering analyses and simulations; the testing and verification of telerobotic components; the development and testing of operational scenarios and support the integration and demonstration of flight test systems.

Spacecraft Systems Development and Integration Facility/Integration, Test and Verification Facility - Flight Telerobotic Servicer (SSDIF/ITVF-FTS) [G-13]: The Flight Telerobotic Servicer will utilize the ITVF area in the SSDIF for assembly, integration and servicing task verification, and test with a focus on robotic interfaces with specific payloads. After the launch of the FTS, the facility will continue to test and integrate new robotic technology upgrades and provide verification of the FTS/payload servicing capability and associated interfaces.

Robotics Laboratory [La-07]: The Robotics Laboratory is used to conduct research on the applicability and capability of a variety of manipulator and robotic systems and concepts. The lab is used in the development of automated structural assembly concepts, the evaluation of various manipulator arms and support the Flight Telerobotic Servicer program.

Controls and Robotics Laboratory * [JPL-01]: The Controls and Robotics Laboratory will support various JPL programs on Controls, Sensors, Actuators, Robotics, Teleoperators, Human Factors and Artificial Intelligence. Laboratory space and workstations with computer terminals are operationally coupled to permit large, complex, proof-of-concept demonstrations and integrated experiments and tests. The required technology for Space Station Freedom missions will drive the research and development products of this laboratory.

Automation Sciences Research Facility * [A-02]: The Automation Sciences Research Facility will house the basic research and development activities associated with intelligent autonomous systems technology. The facility will include space for mini-test beds, which will be used to develop and validate automation technologies applicable to Space Station Freedom without impacting the schedules of the major test beds. It will share the use of the Human-Interactive Systems Test Bed (A-03) in the Human Performance Research Laboratory in order to enhance the effectiveness of systems that involve significant man-machine interfaces. The technology developed will increase safety and productivity and reduce costs for many programs -- including a permanent manned presence in space, scientific missions and future Lunar/Mars unmanned and human expeditions.

6. MATERIALS TECHNOLOGY

Materials Compatibility Lab [M-04]: This facility will support materials compatibility analysis and testing in support of the PMMS Waste Management System. Long duration tests of material, component, and system degradation will be conducted using a wide variety of chemical substances so that synergistic effects can be evaluated. Ultimately, a fully configured PMMS Waste Processing Facility will be established to test the effectiveness of the system and validate replacement procedures to identify materials which must be prohibited. This effort will result in a laboratory testing facility primarily for the handling of toxic and corrosive materials needed to develop and qualify materials/components (valves, accumulators, regulators, etc.) for the PMMS system.

Combined Environmental Effects Facility * [M-20]: This facility will be used by the WP-01 contractor to provide a data base for screening, selecting, and qualifying

materials for long-term space exposure by performing simulation tests of the effects of combined environmental influences (thermal, ultraviolet, electron, proton) and analyses of the data acquired.

Contamination Evaluation and Materials Quality Facility [M-21]: Materials and systems will be selected and tested in this facility under realistic operating conditions (temperature and pressure) to verify that contamination levels are acceptable. Products include: (1) derivation of detailed WP-01 engineering requirements based on program needs; (2) definition of cost-effective control methodology; (3) development of thermal/vacuum out-gassing/deposition/effects data base; (4) qualification of materials for WP-01 hardware and systems based on anticipated operating temperatures; (5) improved VCM material selection testing capability; and (6) improved determination of process parameters for outgas contamination conditioning of materials.

Lubricants Evaluation Facility [M-22]: This Lubricants Evaluation Facility is needed to perform in-house lubrication tests, materials evaluations and characterization of lubricants and materials in support of Space Station Freedom research, development, and operations.

Materials Combustion Deterioration Test Facility [M-23]: This facility will be used to conduct tests as specified in NHB 8060.1B for Space Station Freedom work package contractors to obtain information on the flammability and chemical compatibility of materials. The tests conducted are to determine the effect of the Space Station Freedom environment on materials usage applications from a safety standpoint and the long term effects of the environment on the flammability of materials. Materials will also be tested in high pressure oxygen and in storable propellants.

Composites Technology Development Facility * [M-24]: This facility will support composite materials development for structural applications, including racks, pressure vessels, longerons, fasteners, and the Log Module plug door. Test articles will be fabricated. Non-destructive evaluation procedures will be defined for cured-part testing and repair verification. Composite materials applications (thermoset and thermoplastic systems) will be evaluated for primary structure applications.

Atomic Oxygen Test Facility [M-26]: This facility will be used to select materials to meet the atomic oxygen (AO) resistance requirement, candidate WP-01 hardware materials and evaluate protective coatings. Also, an AO data base is needed to aid designers in the selection of acceptable materials for the scope of hardware applications anticipated. The WP-01 contractor plans to utilize this facility to obtain the required AO test data. The facility will support testing of long term AO effects on Space Station Freedom materials and the continued evaluation of new materials that are to be placed in orbit.

Meteoroid/Debris Protection Test Facility [M-27]: The Meteoroid/Debris Protection Test Facility will be used by the WP-01 contractor and is required for screening, evaluating, selecting and qualifying candidate materials, structural configurations, penetration effects of module shell and internal systems for long term debris protection. Other contractors have also requested usage of the facility for structural and pressure vessel testing.

Non-destructive Evaluation (NDE) Facility [M-28]: This facility supports the performance of nondestructive evaluation of fracture-critical WP-01 development,

qualification, and flight hardware. Diagnostic hardware, specifications, procedures, etc., are currently in place. The WP-01 contractor intends to utilize the facility during the development phase. The facility will be used during the operations phase to continue NDE analysis of experiment/equipment racks and other equipment that is returned from orbit.

White Sands Test Facility (WSTF) Materials Laboratory [J-24B]: The WP-02 contractor has proposed to utilize the WSTF Materials Laboratory for Space Station Freedom materials, components and hypervelocity impact testing. Materials tests include flammability, odor evaluations, off-gassing, high pressure impact, ignition susceptibility of metals, combustion properties, explosive characterization of aerospace fluids, etc. Components testing encompasses off-gassing/out-gassing tests of flight hardware, the service life of valves, reliability and qualification testing of components, etc. Tests are also proposed to assess potential hazards caused by the impact of space debris/meteoroids on vessels pressurized with space fluids such as oxygen, nitrogen, hydrazine, and ammonia.

Materials Technology Labs [J-26]: These materials technology labs are used to conduct studies in the areas of materials development, evaluation and certification for long-life. These studies are required to provide data to the work package contractor.

Hypervelocity Test Facility [J-31]: This facility provides the ability to screen and evaluate new materials and configurations. The objective is to evaluate and develop new light-weight materials for use as spacecraft and EVA space-suit shielding. Provides the capability for in-house testing of the effects of small debris particles on Space Station Freedom components such as space-suits, windows and various structural members.

Materials Testing Laboratory [La-04]: This facility will be used to qualify Space Station Freedom thermal control coatings for long-term stability under low-earth orbit conditions and perform verification thermal-cycling tests of composite truss tubes to determine the microcrack resistance of the selected graphite epoxy truss tube material.

7. GROUND AND SPACE OPERATIONS

Systems Engineering and Development Facility * [M-05]: This facility will provide an office building which will be used to house the Space Station Freedom Projects Office and associated personnel. The building will be attached to a building which currently houses the majority of the Space Station Freedom test and training equipment.

Payload Operations Integration Center (POIC) [M-06]: This facility will be used to support real-time payload operations. It will provide an interface with the SSCC and user facilities. It provides a central control point for payload operations; integrates science operation centers; and includes host computer systems for mission planning systems and analytical tools.

Engineering Support Center (ESC) [M-07]: The ESC facility will be used as an adjunct to the Huntsville Operations Support Center (HOSC), to provide WP-01 engineering support for real-time operations. It also serves as a control point for requests from SSCC and POIC for engineering support for operations and supports engineering flight evaluation and anomaly resolution.

Space Station Control Center (SSCC) * [J-42]: The SSCC will provide for continuous real-time Space Station Freedom control and support, manned base systems integration/support, flight activities integration/support, flight crew and ground support personnel integrated training, operations planning and preparation support, ground applications software development and operations concept and procedures verification. ESC functions are inherent in the SSCC.

Platform Control Center (PCC) * [G-01]: This facility, located in the Customer Data Operations Facility (CDOF), will provide for control of the Platform core systems as follows: originate, validate, and verify commands for the core systems; provide a real-time command capability; monitor Platform core systems; track health and safety information on the Platform systems; and manage the Platform hardware and software configurations.

Engineering Support Center - Attached Payload Accommodations Equipment (APAE) * [G-02]: This facility, located in the CDOF, will provide real-time monitoring of maintenance and sustaining engineering for APAE. It will also provide an APAE simulator for training, trend analysis for performance evaluations, operations readiness demonstrations and real-time support for the SSCC and POIC, as required.

Engineering Support Center - Platforms * [G-03]: This facility, located in the CDOF, will allow the following major functions of the Space Station Freedom Platform to be performed: configuration control; performance evaluation; procedures development and evaluation; support for test, verification, and training; and real-time support to the Platform Control Center.

Integrated Logistics Support System [G-06]: This system, located in the SSDIF, will provide storage and staging for WP-03 ground systems at GSFC, including staging for ITVF, GSE, FSE, and short-term storage for flight ORU's. It will also allow logistics planning and support for maintenance and operations, sustaining engineering and systems development for Space Station Freedom Program activities.

Flight Dynamics Facility [G-10]: This facility will provide orbit, attitude and maneuver support for Platforms, APAE Pointing Systems, and Servicing. It will also provide Flight Dynamics Mission planning and operations for platforms and their payloads including the validation of navigational systems, transmittal of space network support data and the calibration of attitude sensors.

Engineering Support Center - Robotics * [G-14]: This facility, located in the CDOF, will provide in-flight performance evaluation of the FTS to support integration test verification, training, and real-time support to SSCC, POIC and PCC. It will also provide configuration control, procedures development and evaluation and support integration, test and verification.

Engineering Support Center * [Le-09]: This facility will be used to support flight operations of the electric power system and provide engineering flight data evaluation, trend analysis and anomaly resolution. It also serves as a control point for power systems sustaining engineering support.

Polar Platform Processing Facility * [K-01A]: This facility at VLS provides the capability to receive and process the Space Station Freedom Polar Platform during non-hazardous operations. The facility can be used for carrier and propulsion module pre-launch checkout and a dry-mate of the carrier and propulsion module.

Polar Platform Hazardous Processing Facility * [K-01B]: This facility at VLS provides the capability to receive and process the Space Station Freedom Polar Platform for hazardous processing. It can also be used for propulsion module loading and wet mate/de-mate of the carrier and propulsion module.

Space Station Hazardous Processing Facility * [K-03]: This facility will be used for servicing Space Station Freedom propulsion components. Gaseous oxygen and hydrogen will be loaded in tank farms on the early missions.

Space Station Logistics Facility * [K-04]: This facility will be used to consolidate and integrate Space Station Freedom logistics activity: intermediate and depot level maintenance, training, supply support, storage, carrier/rack buildup; and shipping and receiving.

Modifications for Space Station Logistics * [K-05]: These facilities provide air-conditioned logistics space for orbital replacement units. It will supplement logistics storage capacity in both [K-04] and [K-06] and will have specific areas identified for GSE storage, reusable container storage and new container storage.

Space Station Processing Facility (SSPF) * [K-06]: This facility will be used for the integration, de-integration, and checkout of all non-hazardous Space Station Freedom elements. It will include final assembly, servicing, testing of elements, logistics element loading/unloading, and payload operations.

Space Station Technology Discipline Operations Center (DOC) * [La-01]: The Space Station Technology Discipline Operations Center will provide a facility from which principal investigators can perform payload operations individually or integrated with other technologists involved with similar or related experiments. The facility will provide the equipment necessary for real-time command, control, and communication with experiment payloads both on-orbit and pre-launch, and for data capture, processing, and storage. This project provides for the modification to Building 1244 which will include the addition of approximately 20,450 square feet, which includes space for mission control rooms, computer room, data operations control room, data storage, conference rooms and offices.

APPENDIX D

Space Station Tier 1 EIS Methodology

The Space Station Tier 1 EIS includes general analyses of potential risks associated with the development, construction, assembly and operation of a Space Station. Because the Station is only now being designed, many of the report's conclusions are based on program requirements, rather than on assessments of actual engineering design, and on traditional NASA safety and design philosophies, rather than on program-specific analyses. Other conclusions are based on sources cited in the footnotes of this report. As a part of the design and development process, NASA will perform extensive analyses in the next five years (1991-1996) to assure that the risks associated with the Station are understood and mitigated to the extent feasible.

Although managerially complex, the Space Station does not pose undue technical difficulties or risk in its development. No extraordinary engineering or manufacturing efforts akin to the Space Shuttle or the Apollo program are expected. Because the Station will be a manned spacecraft, however, its design will incorporate stringent safety requirements to protect the life and health of the crew. These safety requirements will also assure that the Station is environmentally safe, posing little risk of harm to either the physical, terrestrial, or Space Station user environments.

The Space Station requirements relevant to the physical environment have been articulated in Section 4 of this Tier 1 EIS. These requirement incorporate NASA's safety philosophy of identification and assessment of potential hazards, verification of systems performance prior to launch, planning measures to mitigate hazards, designing critical systems for manned spacecraft to be maintainable on orbit where possible, and the inclusion of multiple levels of redundancy into all critical systems to assure a very low probability of failure.

The Space Station Freedom program will include rigorous safety and risk analyses to identify and define hazards associated with hardware and software operations during all phases of the program's development. Design and performance requirements are being developed to eliminate or control identified hazards. An overall safety risk assessment will be performed. It will include the identification of residual hazards or risks, and the provision of recommendations for handling them, through either risk acceptance or a design change.

In order to assure that any hazards are quickly detected after the Station is operational, sensors and other warning devices will be used. For known hazardous conditions, special operational procedures will be developed and followed by all flight and ground personnel.

The Space Station will have an end-to-end caution and warning system to continuously monitor critical system functions and provide information to the crew and ground controllers. The systems will be designed to enable on-board manual override for all safety and critical systems.

In addition, all Space Station elements will be designed to be tolerant of damage from impact by both meteoroids and space debris. As a design goal, all critical Station equipment will be designed such that there is a 0.9955 probability of experiencing no failure due to meteoroid and debris impact over the Station's lifetime which would endanger the crew or the Station's survivability. The analyses

lifetime which would endanger the crew or the Station's survivability. The analyses necessary to design the meteoroid protection for the Station will be performed during the development phase of the program.

Station systems essential for crew safety and Station survival will be designed to be two-failure tolerant with at least three levels of functional redundancy. All Station systems will also be designed to be capable of being restored to full operation on orbit. All multiple redundant systems will be designed to be fail safe should all levels of functional redundancy fail. They will also be designed so that the source of the failure may be detected and isolated to an orbital replacement unit, its interface, or associated software.

These requirements, once incorporated into the program, will ensure that the Space Station operates safely. The Station is being designed to assure its viability and usefulness as a spacecraft. This EIS assumes that the fundamental steps necessary to design the Station properly to minimize environmental impacts and safety risks are being taken.

APPENDIX E

Comment Letters and Responses

Comments on the NASA Space Station Freedom Tier 1 DEIS were received from:

1. U.S. Environmental Protection Agency
2. Arizona Department of Commerce
3. California Governor's Office
4. Florida Office of the Governor
5. Missouri Clearinghouse
6. North Carolina Department of Environment, Health, and Natural Resources
7. Mid-Ohio Regional Planning Commission
8. Pennsylvania Intergovernmental Council
9. South Carolina Office of the Governor
10. West Virginia Governor's Office of Community and Industrial Development

A summary of the comments and the responses is presented below. The comment letters are also included.

1. U.S. Environmental Protection Agency

   Comment: We believe that the Final Tier I EIS should include additional discussions on air quality by providing the types and quantities of the various rocket motor emissions, and should also include information on the cumulative impacts of emissions associated with the 29 Shuttle flights and 4 rocket launches. In addition, we believe that it would be useful to provide in the Final Tier I EIS, a summary of the environmental impacts addressed in the referenced Space Shuttle EIS.

   Response: The Space Shuttle EIS addressed all environmental impacts resulting from Space Shuttle operations. These included air quality impacts resulting from rocket motor emissions. The Shuttle launches required for the Space Station program do not represent any increase over the number of launches assessed as part of that EIS. The text of the Tier I Space Station Freedom EIS has been modified to clarify this.

   There are no current plans to use Expendable Launch Vehicles (ELVs) as part of the baseline Space Station Freedom program, with the exception of one ELV launch for the U.S. Polar Orbiting Platform. The environmental impacts of the Titan IV ELV are discussed in the Environmental Assessment, Titan IV. If a decision is made to employ ELVs for use with the manned base, it will be covered in the Tier 2 EIS.

   The Space Shuttle EIS and the Titan IV EA have been widely distributed and are available to the public.

   Comment: With regard to ionospheric impacts, we recommend that the Final Tier I EIS include a discussion on the impacts associated with the propulsion systems by providing the types and quantities of the various molecular contaminants resulting from leakage, outgassing and venting. A discussion on the cumulative impacts of these releases on the ionosphere should also be included.

Response: Since the Space Station Freedom is still in the design stage, experiments have not yet been finalized. The various types of experiments will determine the type and quantities of the chemical constituents which would be vented. Also, the materials to be selected for use in construction of the Station will govern the outgassing characteristics. The environmental impacts of the hydrazine propulsion system as well as venting, leakage, and outgassing will be evaluated in the Tier 2 EIS after such emissions are better defined.

2. Arizona Department of Commerce

Comment: No comment. Supported as written.

Response: Comment noted.

3. California Office of the Governor

Comment: No opposing comments.

California Coastal Commission staff has reviewed the Draft Tier 1 Environmental Impact Statement (DEIS) prepared by NASA for construction and operation of the proposed Space Station "Freedom." One component of the Space Station program would use the facilities at Vandenburg Air Force Base to launch the U.S. Polar Orbiting Platform (POP). The DEIS states that in February 1988 the Department of the Air Force prepared a Final Environmental Assessment (EA) for the Titan IV launch program, and that all environmental impacts associated with Titan IV launches at Vandenburg AFB are described in detail in the Final EA.

Staff notes that the Final Environmental Assessment for the Titan IV program called for no more than four launches per year. The Final EIS for the Space Station program should indicate if the Polar Orbiting Platform launch is incorporated into the aforementioned Titan IV annual launch program. More than four Titan IV launches per year may generate adverse impacts on coastal resources along the Santa Barbara County coastline. Titan IV/POP launch program environmental impact analysis information should be incorporated into the Final EIS for the Space Station program. In addition, federal consistency review of Space Station development activities that could affect the California coastal zone may be required.

Response: The launch of the Polar Orbiting Platform was included in the Titan IV baseline analyzed in the referenced EA. This launch would not increase the number of launches per year to more than four. The EA resulted in a finding of no significant impact.

4. Florida Office of the Governor

Comment: We request that we be given the opportunity to review and evaluate site specific environmental documents for support facilities. We are primarily interested in the potential environmental impacts of proposed construction and operation of the space station processing facility and hazardous processing facility at KSC.

Environmental documents addressing ground base facilities at KSC should be circulated for a state consistency determination. Please forward drafts of these documents for our review when they are completed.

Response: It is NASA's policy to comply with all State and Federal environmental regulations. This pertains not only to the Space Station but to site specific facilities construction as well. Site specific environmental documents for support facilities will be provided to the State as they become available. At appropriate points in the planning process, environmental documents will be provided to the State pursuant to the consistency determination required by the Coastal Zone Management Act.

Comment: Once a geographic location is under final consideration as the site for new facility construction, the site specific project(s) must be submitted to the Florida Department of State, Division of Historical Resources for review.

Response: When site specific locations for new facility construction are identified, the appropriate environmental documents will be submitted to the Florida Department of State, Division of Historical Resources in full compliance with the Advisory Council on Historic Preservation Regulation 36 CFR Part 800.

5. Missouri Clearinghouse

Comment: No comments or recommendations at this time.

Response: Comment noted.

6. North Carolina Department of Environment, Health, and Natural Resources

Comment: It would appear that the project would have virtually no impact on North Carolina except under the very remote circumstances of accidental reentry of one or more of the four major orbiting elements. If this were to occur, however, it appears that there is the potential for very localized but possibly severe damage. Therefore, it is recommended that NASA be prepared to provide local emergency response personnel with guidance on potential impacts of and proper response to such an event, in a timely manner, if and when it might occur.

Response: The Space Station manned base will fly in a low Earth orbit at a 28.5 degree inclination. This means that its ground track will range between 28.5 degrees North and South latitude. Since North Carolina is mostly above 34 degrees North latitude it is difficult to envision an accidental reentry which could have an impact on North Carolina. However, the probabilities, consequences, and mitigative measures relating to an accidental reentry of the manned base will be addressed in detail in the Tier 2 EIS.

7. Mid-Ohio Regional Planning Commission

Comment: No comment.

Response: Comment noted.

8. Pennsylvania Intergovernmental Council

Comment: No comment.

Response: Comment noted.

9. South Carolina Office of the Governor

   Comment: No comment.

   Response: Comment noted.

10. West Virginia Governor's Office of Community and Industrial Development

    Comment: EIS found to be consistent with overall state goals and objectives.

    Response: Comment noted.

UNITED STATES ENVIRONMENTAL PROTECTION AGENCY
WASHINGTON, D.C. 20460

APR 23 1990

OFFICE OF
ENFORCEMENT AND
COMPLIANCE MONITORING

Mr. Richard H. Kohrs
Director,
Space Station Freedom
NASA Headquarters/Code MF
Washington, DC 20546

Dear Mr. Kohrs:

In accordance with our responsibilities under the National Environmental Policy Act (NEPA) and Section 309 of the Clean Air Act, we have reviewed the Draft Environmental Impact Statement (Draft EIS) Tier I for Space Station Freedom. The proposed action will consist of four elements which are the manned base, a free flying laboratory, and two polar orbiting platforms. Three alternatives to the proposed action are addressed in the draft EIS and include: (1) a different Space Station manned base configuration called the "Power Tower;" (2) a Space Station which is not permanently manned (the Man-Tended Approach (MTA)); and (3) termination of the Space Station Freedom Program (no action).

On the basis of our review, we are rating this tier of the Draft EIS EC-2 (Environmental Concerns - Insufficient Information). Our environmental concerns are based on potential impacts associated with rocket motor emissions associated with the launch activities, and the atmospheric implications of the space station and its use. It is our understanding that NASA is generally aware of our concerns pertaining to the short and long-term air quality impacts associated with rocket motor emissions, and is in the process of conducting a study to determine whether the air emissions associated with rocket motor engines pose a real/significant environmental risk. We believe that the Final Tier I EIS should include additional discussions on air quality by providing the types and quantities of the various rocket motor emissions, and should also include information on the cumulative impacts of emissions associated with the 29 shuttle flights and 4 rocket launches. In addition, we believe that it would be useful to provide in the Final Tier I EIS, a summary of the environmental impacts addressed in the referenced Space Shuttle EIS.

Printed on Recycled Paper

With regard to ionospheric impacts, we recommend that the Final Tier I EIS include a discussion on the impacts associated with the propulsion systems by providing the types and quantities of the various molecular contaminants resulting from leakage, outgassing and venting. A discussion on the cumulative impacts of these releases on the ionosphere should also be included.

An explanation of the EPA rating system is enclosed for your reference. This rating and a summary of EPA's comments will be published in the Federal Register.

Thank your for the opportunity to review this Draft EIS. If you have any questions concerning our comments, please contact either Armand Lepage, Director, Federal Agency Liaison Division at 382-5059 or Gwen Whitt at 475-8797.

Sincerely,

Richard E. Sanderson
Director
Office of Federal Activities

Enclosure

SUMMARY OF THE EPA RATING SYSTEM FOR DRAFT ENVIRONMENTAL IMPACT STATEMENTS: DEFINITIONS AND FOLLOW-UP ACTION *

Environmental Impact of the Action

LO--Lack of Objections

The EPA review has not identified any potential environmental impacts requiring substantive changes to the proposal. The review may have disclosed opportunities for application of mitigation measures that could be accomplished with no more than minor changes to the proposal.

EC--Environmental Concerns

The EPA review has identified environmental impacts that should be avoided in order to fully protect the environment. Corrective measures may require changes to the preferred alternative or application of mitigation measures that can reduce the environmental impact. EPA intends to work with the lead agency to reduce these impacts.

EO--Environmental Objections

The EPA review has identified significant environmental impacts that should be avoided in order to provide adequate protection for the environment. Corrective measures may require substantial changes to the preferred alternative or consideration of some other project alternative (including the no-action alternative or a new alternative). EPA intends to work with the lead agency to reduce these impacts.

EU--Environmentally Unsatisfactory

The EPA review has identified adverse environmental impacts that are of sufficient magnitude that they are unsatisfactory from the standpoint of public health or welfare or environmental quality. EPA intends to work with the lead agency to reduce these impacts. If the potential unsatisfactory impacts are not corrected at the final EIS stage, this proposal will be recommended for referral to the CEQ.

Adequacy of the Impact Statement

Category I--Adequate

EPA believes the draft EIS adequately sets forth the environmental impact(s) of the preferred alternative and those of the alternatives reasonably available to the project or action. No further analysis of data collection is necessary, but the reviewer may suggest the addition of clarifying language or information.

Category 2--Insufficient Information

The draft EIS does not contain sufficient information for EPA to fully assess environmental impacts that should be avoided in order to fully protect the environment, or the EPA reviewer has identified new reasonably available alternatives that are within the spectrum of alternatives analyzed in the draft EIS, which could reduce the environmental impacts of the action. The identified additional information, data, analyses, or discussion should be included in the final EIS.

Category 3--Inadequate

EPA does not believe that the draft EIS adequately assesses potentially significant environmental impacts of the action, or the EPA reviewer has identified new, reasonably available alternatives that are outside of the spectrum of alternatives analyzed in the draft EIS, which should be analyzed in order to reduce the potentially significant environmental impacts. EPA believes that the identified additional information, data, analyses, or discussions are of such a magnitude that they should have full public review at a draft stage. EPA does not believe that the draft EIS is adequate for the purposes of the NEPA and/or Section 309 review, and thus should be formally revised and made available for public comment in a supplemental or revised draft EIS. On the basis of the potential significant impacts involved, this proposal could be a candidate for referral to the CEQ.

* From EPA Manual 1640 Policy and Procedures for the Review of Federal Actions Impacting the Environment

February, 1987

ROSE MOFFORD
GOVERNOR

ARIZONA DEPARTMENT OF COMMERCE
3800 NORTH CENTRAL AVENUE SUITE 1500
PHOENIX, ARIZONA 85012
(602) 280-1300
FAX: (602) 280-1305

DONALD E. CLINE
DIRECTOR

MEMORANDUM

TO : NASA

FROM : ARIZONA STATE CLEARINGHOUSE

DATE : May 8, 1990

RE : NATIONAL AERON. & SPACE ADMIN.
EIS SPACE STATION FREEDOM PROGRAM 12.999
AZ900316800010

This memorandum is in response to the above project submitted to the Arizona State Clearinghouse for review.

The project has been reviewed pursuant to the Executive Order 12372 by certain Arizona State officials and Regional Councils of Government.

If the Standard Form 424 was submitted with the application, it is attached for your information.

No comments were received on this project. It was supported as written. If any comments are received we will forward them to you for your consideration.

Attachment

cc: Arizona State Clearinghouse
Applicant

State of California
GOVERNOR'S OFFICE
OFFICE OF PLANNING AND RESEARCH
1400 TENTH STREET
SACRAMENTO 95814

GEORGE DEUKMEJIAN
GOVERNOR

(916) 323-7480

DATE: May 10, 1990

TO: Division Director
National Aeronautics and Space Station
Space Station Freedom Program
ATTN: Lynette Wigbels
Washington, DC 20546

FROM: Office of Planning and Research
State Clearinghouse

RE: Draft Tier I EIS for Space Station Freedom (Primary Center, Vandenberg AFB, Santa Barbara County) SCH 90040039

As the designated California Single Point of Contact, pursuant to Executive Order 12372, the Office of Planning and Research transmits attached comments as the State Process Recommendation.

This recommendation is a consensus; no opposing comments have been received. Initiation of the "accommodate or explain" response by your agency is, therefore, in effect.

Sincerely,

Robert P. Martinez
Director

Attachment

cc: Applicant

Resources Building
1416 Ninth Street
95814
(916) 445-5656
TDD (916) 324-0804

California Conservation Corps
Department of Boating and Waterways
Department of Conservation
Department of Fish and Game
Department of Forestry
Department of Parks and Recreation
Department of Water Resources

GEORGE DEUKMEJIAN
GOVERNOR OF
CALIFORNIA

THE RESOURCES AGENCY OF CALIFORNIA
SACRAMENTO, CALIFORNIA

Air Resources Board
California Coastal Commission
California Tahoe Conservancy
California Waste Management Board
Colorado River Board
Energy Resources Conservation And Development Commissio
San Francisco Bay Conservatio and Development Commissio
State Coastal Conservancy
State Lands Division
State Reclamation Board
State Water Resources Control Board
Regional Water Quality Control Boards

Division Director
National Aeronautics and Space Administration
Space Station Freedom Program
ATTN: Lynette Wigbels
Washington, DC 20546

May 10, 1990

Dear Ms. Wigbels:

The State has reviewed the Draft Tier I EIS for Space Station Freedom (Primary Center, Vandenberg AFB, Santa Barbara County), submitted through the Office of Planning and Research.

We coordinated review of this document with the California Highway Patrol, the Air Resources Board, the California Coastal Commission, the Central Coast Regional Water Quality Control Board, and the Departments of Fish and Game, Transportation, and Water Resources.

The California Coastal Commission has provided the attached comments for your consideration.

Thank you for providing an opportunity to review this project.

Sincerely,

Nodella Gayzon

for Gordon F. Snow, Ph.D
Assistant Secretary for Resources

Attachment

cc: Office of Planning and Research
1400 Tenth Street
Sacramento, CA 95814
(SCH 90040039)

STATE OF CALIFORNIA—THE RESOURCES AGENCY GEORGE DEUKMEJIAN, Governor

CALIFORNIA COASTAL COMMISSION
631 HOWARD STREET, 4TH FLOOR
SAN FRANCISCO, CA 94105-3973
(415) 543-8555
Hearing Impaired/TDD (415) 896-1825

May 4, 1990

Ms. Nadell Gayou
California Department of Water Resources
1416 Ninth Street, Room 215-4
Sacramento, CA 95814

Re: Draft Tier 1 Environmental Impact Statement for NASA Space Station Freedom.

Dear Ms. Gayou:

Commission staff has reviewed the Draft Tier 1 Environmental Impact Statement (DEIS) prepared by NASA for construction and operation of the proposed Space Station "Freedom." One component of the Space Station program would use the facilities at Vandenburg Air Force Base to launch the U.S. Polar Orbiting Platform (POP). The DEIS reports that this self-contained, free-flying spacecraft will be launched by a Titan IV rocket from Vandenburg AFB. It will perform observations of Earth's biology, geology, and oceans; lower and atmospheric research and monitoring; solar observations; and plasma physics measurements. The DEIS states that in February 1988 the Department of the Air Force prepared a Final Environmental Assessment (EA) for the Titan IV launch program, and that all environmental impacts associated with Titan IV launches at Vandenburg AFB are described in detail in the Final EA.

Staff notes that the Final Environmental Assessment for the Titan IV program called for no more than four launches per year. The Final EIS for the Space Station program should indicate if the Polar Orbiting Platform launch is incorporated into the aforementioned Titan IV annual launch program. More than four Titan IV launches per year may generate adverse impacts on coastal resources along the Santa Barbara County coastline. Titan IV/POP launch program environmental impact analysis information should be incorporated into the Final EIS for the Space Station program. In addition, federal consistency review of Space Station development activities that could affect the California coastal zone may be required

Thank you for the opportunity to comment on the Draft Tier 1 Environmental Impact Statement.

Sincerely,

Larry Simon

Larry Simon
Staff Analyst

7049P

STATE OF FLORIDA

Office of the Governor

THE CAPITOL
TALLAHASSEE, FLORIDA 32399-0001

BOB MARTINEZ
GOVERNOR

May 1, 1990

Ms. Lynette Wigbels
National Aeronautics and Space Administration
Headquarters (Code MF)
Washington, D.C. 20546

RE: Environmental Impact Statement (EIS) for the Space Station Freedom Program

SAI: FL9003141098C

Dear Ms. Wigbels:

The Florida State Clearinghouse, pursuant to Presidential Executive Order 12372, Gubernatorial Executive Order 83-150, the Coastal Zone Management Act and the National Environmental Policy Act, has coordinated a review of the above referenced project.

Pursuant to Presidential Executive Order 12372, the project will be in accord with State plans, programs, procedures and objectives when consideration is given to and action taken on the enclosed comments and requirements of our reviewing agencies.

The federal agency did not provide a federal consistency determination for this project in accordance with 15 CFR 930, subpart C. However, the State has completed a review of the project information available at this time. Based on this information, the project at this stage is consistent with the Florida Coastal Management Program. Although the State does not object to the proposed work, we have identified several issues which must be resolved as the project progresses through later stages of planning, design and funding. As required by 15 CFR 930.34 and .37, at each major point of decision-making the federal agency is required to submit a consistency determination for the State's review. The format and content of the determination are described in 15 CFR 930.34 - .39. The State's continued agreement with this project will be based, in part, on adequate reconciliation of previously identified concerns.

This letter reflects your compliance with Presidential Executive Order 12372.

Sincerely,

Karen K. MacFarland

Karen K. MacFarland, Director
State Clearinghouse

KKM/rt

Enclosure(s)

Response From: Department of Environmental Regulation
Department of State
East Central Florida Regional Planning Council

cc: DER
DOS
ECFRPC
Ted Hoehn
C. Howard Robins, Jr.

Florida Department of Environmental Regulation

Twin Towers Office Bldg. • 2600 Blair Stone Road • Tallahassee, Florida 32399-2400

Bob Martinez, Governor Dale Twachtmann, Secretary John Shearer, Assistant Secretary

March 29, 1990

Mr. Don Henningsen, Senior Government Analyst
Intergovernmental Coordination
Office of the Governor
413 Carlton Building
Tallahassee, FL 32399-0001

RECEIVED
APR 3 1990
STATE CLEARINGHOUSE

Dear Mr. Henningsen:

RE: EIS, Space Station Freedom
SAI: 9003141098C, Brevard County

We have reviewed the Draft Environmental Impact Statement for Space Station Freedom and we have no objections to the proposed shuttle, establishment of the station in space and the subsequent operation of the station. These phases of the project are considered consistent with our authorities in the Florida Coastal Management Program. However, we request that we be given the opportunity to review and evaluate site specific environmental documents for support facilities. We are primarily interested in the potential environmental impacts of proposed construction and operation of the space station processing facility and hazardous processing facility at the John F. Kennedy Space Center (KSC).

Environmental documents addressing ground base facilities at KSC should be circulated for a state consistency determination. Please forward drafts of these document for our review when the are completed.

Sincerely,

Mickey D. Bryant

Mickey D. Bryant, Administrator
Intergovernmental Coordination
Division of Water Management

MDB/pmg

Recycled Paper

FLORIDA DEPARTMENT OF STATE

Jim Smith
Secretary of State
DIVISION OF HISTORICAL RESOURCES
R.A. Gray Building
500 South Bronough
Tallahassee, Florida 32399-0250
Director's Office (904) 488-1480
Telecopier Number (FAX) (904) 488-3353

RECEIVED
MAR 27 1990
STATE CLEARINGHOUSE

March 22, 1990

Karen K. MacFarland
State Planning and Development
Clearinghouse
Office of Planning and Budgeting
The Capitol
Tallahassee, Florida 32399-0001

In Reply Refer To:
Susan M. Henefield-Herring
Historic Sites Specialist
(904) 487-2333
Project File No. 900812

RE: Cultural Resource Assessment Request
SAI #FL9003141098C, NASA Draft Tier 1 Environmental Impact Statement for Space Station Freedom
Brevard County, Florida

Dear Ms. MacFarland:

In accordance with the procedures contained in 36 C.F.R., Part 800 ("Protection of Historic Properties"), we have reviewed the above referenced project(s) for possible impact to archaeological and historical sites or properties listed, or eligible for listing, in the National Register of Historic Places. The authority for this procedure is the National Historic Preservation Act of 1966 (Public Law 89-665), as amended.

We have reviewed the above referenced Environmental Impact Statement and have the following comments. This project is expected to result in the expansion and addition to existing ground facilities, which would result in new construction. It is the recommendation of this agency that once a geographic location is under final consideration as the site for new construction, the site specific project(s) must be submitted to this agency for review.

Thus, it is the opinion of this agency that conditioned upon site specific construction plans being submitted to this agency for review, project activities will have no effect on any archaeological or historic sites or properties listed, or eligible for listing, in the National Register of Historic Places, or otherwise of national, state, regional, or local significance. The project is consistent with the historic preservation aspects of Florida's coastal zone program.

If you have any questions concerning our comments, please do not hesitate to contact us. Your interest in protecting Florida's archaeological and historic resources is appreciated.

Sincerely,

George W. Percy, Director
Division of Historical Resources
and
State Historic Preservation Officer

GWP/smh

East Central Florida Regional Planning Council

1011 Wymore Road • Suite 105 • Winter Park, Florida 32789 • Telephone: (407) 645-3339 • FAX: (407) 647-4234

April 23, 1990

State Clearinghouse
State of Florida
Office of the Governor
The Capitol
Tallahassee, FL 32399-0001

RECEIVED
APR 25 1990
STATE CLEARINGHOUSE

SUBJECT: SAI# FL9003141098C
ECFRPC # RE-90-13

Dear Sir/Madam:

In accordance with the Office of Planning and Budgeting Intergovernmental Coordination and Review Process, this office has conducted a clearinghouse review of the above referenced proposal. The proposal consists of:

a. Tier 1, Space Station Freedom is for development of the design and development of a manned space station over a 30 year period.

Based on this review the Council offers the following comments and/or recommendations:

1. The proposed project, as presented for review and when considered in its entirety, is not inconsistent with the adopted Goals, Policies and Objectives of the East Central Florida Regional Planning Council.

Should there be any questions concerning this review, please contact the Project Review Division at the Council office.

Sincerely,

Cliff Guillet
Executive Director

CG/tlh

CHAIRMAN
COMMISSIONER D. LEE CONSTANTINE
City of Altamonte Springs

VICE-CHAIRMAN
COMMISSIONER THAD ALTMAN
Brevard County

SECRETARY-TREASURER
MR. THOMAS PATRICK GREEN
Lake County

EXECUTIVE DIRECTOR
MR. CLIFF GUILLET

John Ashcroft
Governor

James R. Moody
Commissioner

State of Missouri
OFFICE OF ADMINISTRATION
Post Office Box 809
Jefferson City
65102

Stan Perovich
Director
Division of General Services

April 10, 1990

Ms. Lynette Wigbels
NASA Headquarters/Code MF
Washington, D.C. 20546

Dear Ms. Wigbels:

Subject: 90030072 - Environmental Impact Statement for the Space Station Freedom Program

The Missouri Federal Assistance Clearinghouse, in cooperation with state and local agencies interested or possibly affected, has completed the review on the above project application.

None of the agencies involved in the review had comments or recommendations to offer at this time. This concludes the Clearinghouse's review.

A copy of this letter is to be attached to the application as evidence of compliance with the State Clearinghouse requirements.

Sincerely,

Lois Pohl c.m.

Lois Pohl, Coordinator
Missouri Clearinghouse

LP:cm

8 04/16/90

NORTH CAROLINA STATE CLEARINGHOUSE
DEPARTMENT OF ADMINISTRATION
116 WEST JONES STREET
RALEIGH NORTH CAROLINA 27611

HPA
CR

INTERGOVERNMENTAL REVIEW COMMENTS

AILED TO

ASA
YNETTE WIGBELS
ASH HDQTRS./CODE MF
ASHINGTON, DC 20546

FROM

MRS. CHRYS BAGGETT
DIRECTOR
N C STATE CLEARINGHOUSE

ROJECT DESCRIPTION

PACE STATION FREEDOM PROGRAM - SCIENCE LAB CONSISTING OF FOUR
AJOR ELEMENTS - HUMAN OCCUPIED BASE, EUROPEAN SPACE AGENCY (ESA)
REE FLYING LAB, AND TWO OTHER PLATFORMS

AI NO 90E00000689 PROGRAM TITLE - DRAFT EIS

HE ABOVE PROJECT HAS BEEN SUBMITTED TO THE NORTH CAROLINA

NTERGOVERNMENTAL REVIEW PROCESS. AS A RESULT OF THE REVIEW THE FOLLOWING

S SUBMITTED ( ) NO COMMENTS WERE RECEIVED

(X) COMMENTS ATTACHED

HOULD YOU HAVE ANY QUESTIONS, PLEASE CALL THIS OFFICE (919) 733-0499.

State of North Carolina
Department of Environment, Health, and Natural Resources
512 North Salisbury Street • Raleigh, North Carolina 27611

James G. Martin, Governor
William W. Cobey, Jr., Secretary

Douglas G. Lewis
Director
Planning and Assessment

MEMORANDUM

TO: Chrys Baggett
State Clearinghouse

FROM: Melba McGee
Project Review Coordinator

RE: 90-0689 - Draft EIS for the Space Station Freedom Program

DATE: April 2, 1990

The Department of Environment, Health, and Natural Resources has reviewed the proposed project. Based on the information received, it would appear that the project would have virtually no impact on North Carolina except under the very remote circumstances of accidental reentry of one or more of the four major orbiting elements. If this were to occur, however, it appears that there is the potential for very localized but possibly severe damage. Therefore, it is recommended that NASA be prepared to provide local emergency response personnel with guidance on potential impacts of and proper response to such an event, in a timely manner, if and when it might occur.

Thank you for the opportunity to respond.

MM:bb

P.O. Box 27687, Raleigh, North Carolina 27611-7687 Telephone 919-733-6376

STATE CLEARINGHOUSE
State of Ohio - Office of Budget and Management

30 EAST BROAD STREET • 34TH FLOOR • COLUMBUS, OHIO 43266-0411 • (614) 466-0697 / 0698

Date: 04-20-90

NATIONAL AERONAUTICS & SPACE ADMINISTRATION
SPACE STATION FREEDOM PROGRAM
WASHINGTON DC 20546-0000

Attention: DIVISION DIRECTOR Phone: (202)453-8662

RE: Intergovernmental Review, Environmental Assessment/Impact Statement Completion Letter
Project Description: DRAFT EIS, TIER I, SPACE STATION FREEDOM, GLOBAL IMPACT, START DATE 1995, 36 MONTHS DURATION, FEBRUARY 1990
State Application Identification (SAI) Number: OH900312-N254-36631

The State Clearinghouse (Single Point of Contact) has reviewed the Environmental Assessment/Impact Statement for the above identified project that is covered by the National Environmental Policy Act of 1969, and any amendments; Intergovernmental Review Process (Presidential Executive Order 12372); Gubernatorial Executive Order authorized under Ohio Revised Code, Section 107.18(A); and/or other pertinent regulations and guidelines.

This document has been simultaneously reviewed by interested state agencies, with a notice to the impacted area clearinghouse(s). Our office may have attached comments for your consideration and/or response.

You should be advised that some of the reviewing state agencies may respond directly to you without submitting their comments through the State Single Point of Contact. We encourage our reviewing agencies to keep in direct contact with issuing agencies on all environmental assessment/impact statement reviews. Therefore, considertheir directly generated comments as valid responses.

It is recommended that contact be made with all the commenting agencies. Addresses and phone are available on individual Transmittal Forms and/or contained in a letter received by our agency. The comments which have been generated should become part of the proposal and responded to before a final decision is made regarding this assessment/impact statement.

Should this be a draft proposal, please provide our office with fourteen (14) copies of the final product.

Sincerely,

Larry W. Weaver, State Federal Funds Coordinator
Office of Budget & Management

morpc

Mid-Ohio Regional Planning Commission
PHONE (614) 228-2663
FAX (614) 621-2401

(614) 252-1171 (614) 224-POOL

aron McCloy Reichard
airman

chard A. King
e Chairman

n. Paul J. Felco
cretary

liam H. Anderson
airman
ministrative Committee

dy Bailey Hoffmann
airman
anklin County Planning
ea Subcommittee

chael Wasylik
airman
gislative Task Force

anne Bolton
airman
cal Government
ommittee

avid Younger
airman
ansportation Advisory
ommittee

ill Habig
ecutive Director

Dear Applicant

The Mid-Ohio Regional Planning Commission, as a metropolitan clearinghouse for Franklin and Delaware Counties, and in accordance with regulations and procedures established under Executive Order 12372, Intergovernmental Review Process, Office of Management and Budget, has reviewed your organization's project proposal(s).

Our review has concentrated on issues of coordination and correspondence of the project with existing plans. Attached is MORPC's position on the project(s) which has been forwarded to the State Clearinghouse.

Sincerely,

Gloria Wilburn
Intergovernmental Review Officer

285 East Main Street • Columbus, Ohio 43215-5272

FFICE OF BUDGET AND MANAGEMENT

TATE CLEARINGHOUSE TRANSMITTAL

30 E. Broad St., 34th Floor
Columbus, Ohio, 43266-0411
Phone (614) 466-0697 / 0698

STATE APPLICATION IDENTIFIER NO: OH900312-N254-36631
RESPONSE ON 60 DAY REVIEW SHOULD BE RETURNED 15 DAYS PRIOR TO CLEARANCE DATE OF: 90-04-20
FOR FULL APPLICATION CALL BY : 3/26

APPLICANT: NATIONAL AERONAUTICS & SPACE ADMINISTRATION
ADDRESS: SPACE STATION FREEDOM PROGRAM
CITY: WASHINGTON STATE: DC ZIP: 20546-0000
ATTENTION: DIVISION DIRECTOR PHONE: (202) 453-8662

PROPOSED FEDERAL FUND: $00
PROPOSED TOTAL FUND : $00

PROJECT : ENVIRONMENTAL IMPACT STATEMENT

PROJECT DESC. DRAFT EIS, TIER I, SPACE STATION FREEDOM, GLOBAL IMPACT, START DATE 1995, 36 MONTHS DURATION, FEBRUARY 1990

REVIEW AGENCY: DEPARTMENT OF AGRICULTURE
DEPARTMNT OF NATURAL RESOURCES
DEPARTMENT OF HEALTH
DEPARTMENT OF TRANSPORTATION
OH ENVIRONMENTAL PROTECTION AG
GOVERNOR- Interagency Coordinator - Information
ST HISTORIC PRESERVATION OFF

FOR YOUR INFORMATION ONLY

STATE-WIDE CLEARING HOUSES:

Ashland	Bel-O-Mar	B-H-J	BH-HVRDD	CLARK	Columbiana
Clinton	Crawford	EDATA	Erie	Fairfield	Fayette
Hancock	Hardin	Huron	Knox	KYOVA	Licking
Lima-Allen	L-U-C	Madison	Marion	Maumee	Mercer
Miami CC	Miami Valley	MORPC	MWOJPC	Morrow	NOACA
NEFCO	O-K-I	OMEGA	OVRDC	Pickaway	Portage
Richland	Seneca	Shelby	Stark	TMACOG	Wyandot

viewing agency must complete this section.

OMMENTS - attach another sheet. Comments cited in this Section must include (1) Identification of reviewing agency's statute or specific plan or program related to s proposal; (2) Description of impact of this proposal on identified plan or program; (3) Reviewer's recommended changes for or additions to the proposal. Please e all comments and include SAI number on your comment sheet.

EVIEWING AGENCY POSITION ON PROJECT (Mark one only)

No comment.

Clearance of the project should be granted.

Clearance of the project should not be delayed, but applicant should answer the reviewer's questions or concerns. See enclosed comments.

Clearance of the project should only be granted on the condition that the applicant use the recommendations in the enclosed comments. (Executive or Deputy Director Signature Needed.)

Clearance of the project should be delayed until the applicant has satisfactorily addressed the concerns stated in the enclosed comments. (Executive or Deputy Director Signature Needed.)

PLEASE TYPE THE FOLLOWING INFORMATION:

Reviewer's Name

Agency Name _____ Div _____

Street Address _____ City _____ State _____

Executive or Deputy Signature

Phone _____ Zip Code _____

M 8005 (Rev 8/87)

Pennsylvania Intergovernmental Council

P. O. BOX 11880 • HARRISBURG, PA. 17108-1880 • (717) 783-3700

April 10, 1990

Ms. Lynette Wigbels
NASA Headquarters/Code MF
Washington, D.C. 20546

Dear Ms. Wigbels:

Subject: Environmental Impact Statement for the Space Station Freedom Program

Pennsylvania's Single Point of Contact under Executive Order 12372 (Intergovernmental Review of Federal Programs) has received copies of the Draft Environmental Impact Statement for the Space Station Freedom Program. We distributed copies to several of our reviewing agencies; these agencies do not wish to comment on the EIS.

We appreciate the opportunity to review this document.

Sincerely,

Sandra L. Kline

Sandra L. Kline
Project Coordinator
Intergovernmental Review Process

Strengthening Intergovernmental Relations and Public Decision-making in Pennsylvania

State of South Carolina

Office of the Governor

CARROLL A. CAMPBELL, JR
GOVERNOR

OFFICE OF EXECUTIVE
POLICY AND PROGRAMS

June 8, 1990

Division Director
Space Station Freedom Program
National Aeronautics and Space Administration
Washington, D. C. 20546

Re: Draft Environmental Impact Statement
for the Space Station Freedom Program

Dear Sir or Madam:

The South Carolina Project Notification and Review System has conducted an intergovernmental review on the above referenced activity, as authorized by Presidential Executive Order 12372, "Intergovernmental Review of Federal Programs". The resulting comments from the following agencies and/or individuals are enclosed for your use: South Carolina Department of Health and Environmental Control; Emergency Preparedness Division, Office of the Adjutant General; South Carolina Wildlife and Marine Resources Department; Governor's Division of Public Safety Programs; Southern Division, Naval Facilities Engineering Command, Department of the Navy; City of Cayce; Upper Savannah Council of Governments; Santee-Lynches Council for Governments; Pee Dee Regional Planning and Development Council.

The State Application Identifier number for this proposal is EIS-9003-004. This number should be used in any future correspondence with this office or the local clearinghouse. Thank you for the opportunity to review your proposed activity. If I may answer any questions, or be of further service in any way, please do not hesitate to contact me at (803) 734-0493.

Sincerely,

Danny L. Cromer
State Single Point of Contact
Intergovernmental Review

DLC/jr

Enclosures

South Carolina
Project Notification & Review System

STATE APPLICATION IDENTIFIER
EIS-9003-004
~~5/4/90~~ 5/15/90
(SUSPENSE DATE)

Steve Davis
South Carolina Department of Health
and Environmental Control

The attached project notification is being referred to your agency in accordance with Presidential Executive Order 12372, "Intergovernmental Review of Federal Programs." The South Carolina Project Notification and Review System provides the opportunity for state and local reviews of federal and federally assisted development programs and projects. Please provide comments below, relating the proposed project to the plans, policies, and programs of your agency. All comments received will be reviewed and utilized by the State Clearinghouse in making the official state recommendation concerning the project to the cognizant federal agency. Any questions may be directed to this office by phone at 734-0493. Prior to the above suspense date please return this completed form to:

Grant Services
Office of the Governor
1205 Pendleton Street
Columbia, South Carolina 29201

Signature Cheryl Griffith for

Name Danny L. Cromer

RESULTS OF AGENCY REVIEW

- [ ] PROJECT CONSISTENT WITH AGENCY PLANS AND POLICIES
- [ ] AGENCY REQUESTS CONFERENCE TO DISCUSS COMMENTS
- [x] AGENCY COMMENTS ON PROPOSED APPLICATION AS FOLLOWS

No comment

(Use additional sheets if necessary)

Signature [illegible] Date 5/2/90

Title _____ Phone _____

South Carolina
Project Notification & Review System

RECEIVED

GRANT SERVICES

STATE APPLICATION IDENTIFIER

EIS-9003-004

~~5/4/90~~ 5/15/90

(SUSPENSE DATE)

Paul R. Lunsford
Emergency Preparedness Division
Office of the Adjutant General

The attached project notification is being referred to your agency in accordance with Presidential Executive Order 12372, "Intergovernmental Review of Federal Programs." The South Carolina Project Notification and Review System provides the opportunity for state and local reviews of federal and federally assisted development programs and projects. Please provide comments below, relating the proposed project to the plans, policies, and programs of your agency. All comments received will be reviewed and utilized by the State Clearinghouse in making the official state recommendation concerning the project to the cognizant federal agency. Any questions may be directed to this office by phone at 734-0493. Prior to the above suspense date please return this completed form to:

Grant Services
Office of the Governor
1205 Pendleton Street
Columbia, South Carolina 29201

Signature Cheryl Huffstetler for

Name Danny L. Cromer

RESULTS OF AGENCY REVIEW

- [X] PROJECT CONSISTENT WITH AGENCY PLANS AND POLICIES
- [ ] AGENCY REQUESTS CONFERENCE TO DISCUSS COMMENTS
- [ ] AGENCY COMMENTS ON PROPOSED APPLICATION AS FOLLOWS

(Use additional sheets if necessary)

Signature Paul R. Lunsford

Date 5-3-90

Title DIRECTOR

Phone 734-8020

South Carolina
Project Notification & Review System

STATE APPLICATION IDENTIFIER
EIS-9003-004
~~5/4/90~~ 5/15/90
(SUSPENSE DATE)

Dr. James A. Timmerman, Jr.
South Carolina Wildlife and
Marine Resources Department

RECEIVED
MAY 3 1990
S. C. WILDLIFE
RESOURCES DEPT.

The attached project notification is being referred to your agency in accordance with Presidential Executive Order 12372, "Intergovernmental Review of Federal Programs." The South Carolina Project Notification and Review System provides the opportunity for state and local reviews of federal and federally assisted development programs and projects. Please provide comments below, relating the proposed project to the plans, policies, and programs of your agency. All comments received will be reviewed and utilized by the State Clearinghouse in making the official state recommendation concerning the project to the cognizant federal agency. Any questions may be directed to this office by phone at 734-0493. Prior to the above suspense date please return this completed form to:

Grant Services
Office of the Governor
1205 Pendleton Street
Columbia, South Carolina 29201

Signature [signature] for

Name Danny L. Cromer

RESULTS OF AGENCY REVIEW

- [x] PROJECT CONSISTENT WITH AGENCY PLANS AND POLICIES
- [ ] AGENCY REQUESTS CONFERENCE TO DISCUSS COMMENTS
- [ ] AGENCY COMMENTS ON PROPOSED APPLICATION AS FOLLOWS

(Use additional sheets if necessary)

Signature [signature] Date May 9, 1990

Title Executive Director Phone 734-4008

South Carolina
Project Notification & Review System

Stanley M. McKinney
Governor's Division of Public Safety Programs

STATE APPLICATION IDENTIFIER

EIS-9003-004

~~5/4/90~~ 5/15/90

(SUSPENSE DATE)

The attached project notification is being referred to your agency in accordance with Presidential Executive Order 12372, "Intergovernmental Review of Federal Programs." The South Carolina Project Notification and Review System provides the opportunity for state and local reviews of federal and federally assisted development programs and projects. Please provide comments below, relating the proposed project to the plans, policies, and programs of your agency. All comments received will be reviewed and utilized by the State Clearinghouse in making the official state recommendation concerning the project to the cognizant federal agency. Any questions may be directed to this office by phone at 734-0493. Prior to the above suspense date please return this completed form to:

Grant Services
Office of the Governor
1205 Pendleton Street
Columbia, South Carolina 29201

Signature Cheryl Geffken for

Name Danny L. Cromer

RESULTS OF AGENCY REVIEW

- [ ] PROJECT CONSISTENT WITH AGENCY PLANS AND POLICIES
- [ ] AGENCY REQUESTS CONFERENCE TO DISCUSS COMMENTS
- [ ] AGENCY COMMENTS ON PROPOSED APPLICATION AS FOLLOWS

(Use additional sheets if necessary)

Signature _____ Date _____

Title _____ Phone _____

South Carolina
Project Notification & Review System

RECEIVED
MAY 3 1990

COMMANDING OFFICER
SOUTHERN DIV NAVAL FACILITIES
ENGINEERING COMMAND
POST OFFICE BOX 10068
CHARLESTON SC 29411

STATE APPLICATION IDENTIFIER
EIS-9003-004
~~5/4/90~~ 5/15/90
(SUSPENSE DATE)

The attached project notification is being referred to your agency in accordance with Presidential Executive Order 12372, "Intergovernmental Review of Federal Programs." The South Carolina Project Notification and Review System provides the opportunity for state and local reviews of federal and federally assisted development programs and projects. Please provide comments below, relating the proposed project to the plans, policies, and programs of your agency. All comments received will be reviewed and utilized by the State Clearinghouse in making the official state recommendation concerning the project to the cognizant federal agency. Any questions may be directed to this office by phone at 734-0493. Prior to the above suspense date please return this completed form to:

Grant Services
Office of the Governor
1205 Pendleton Street
Columbia, South Carolina 29201

Signature [signature] for

Name Danny L. Cromer

RESULTS OF AGENCY REVIEW

- [x] PROJECT CONSISTENT WITH AGENCY PLANS AND POLICIES
- [ ] AGENCY REQUESTS CONFERENCE TO DISCUSS COMMENTS
- [ ] AGENCY COMMENTS ON PROPOSED APPLICATION AS FOLLOWS

RECEIVED
MAY 11 19
GRANT SERVICES

(Use additional sheets if necessary)

Signature [signature] Date 5/10/90

Title Intergovernmental Coordinator Phone (803) 743-0990

South Carolina
Project Notification & Review System

RECEIVED
MAY 3 1990

MR E H HEUSTESS JR MANAGER
CITY OF CAYCE
PO BOX 2004
CAYCE SC 29171

STATE APPLICATION IDENTIFIER

EIS-9003-004

~~5/14/90~~ 5/15/90

(SUSPENSE DATE)

The attached project notification is being referred to your agency in accordance with Presidential Executive Order 12372, "Intergovernmental Review of Federal Programs." The South Carolina Project Notification and Review System provides the opportunity for state and local reviews of federal and federally assisted development programs and projects. Please provide comments below, relating the proposed project to the plans, policies, and programs of your agency. All comments received will be reviewed and utilized by the State Clearinghouse in making the official state recommendation concerning the project to the cognizant federal agency. Any questions may be directed to this office by phone at 734-0493. Prior to the above suspense date please return this completed form to:

Grant Services
Office of the Governor
1205 Pendleton Street
Columbia, South Carolina 29201

Signature [signature]

Name Danny L. Cromer

RESULTS OF AGENCY REVIEW

- [x] PROJECT CONSISTENT WITH AGENCY PLANS AND POLICIES
- [ ] AGENCY REQUESTS CONFERENCE TO DISCUSS COMMENTS
- [ ] AGENCY COMMENTS ON PROPOSED APPLICATION AS FOLLOWS

(Use additional sheets if necessary)

Signature [signature] Date 5/9/90

Title City Mgr. Phone

South Carolina
Project Notification & Review System

STATE APPLICATION IDENTIFIER

EIS-9003-004

~~5/4/90~~ 5/15/90

(SUSPENSE DATE)

James Darby
Santee-Lynches Council for Governments

The attached project notification is being referred to your agency in accordance with Presidential Executive Order 12372, "Intergovernmental Review of Federal Programs." The South Carolina Project Notification and Review System provides the opportunity for state and local reviews of federal and federally assisted development programs and projects. Please provide comments below, relating the proposed project to the plans, policies, and programs of your agency. All comments received will be reviewed and utilized by the State Clearinghouse in making the official state recommendation concerning the project to the cognizant federal agency. Any questions may be directed to this office by phone at 734-0493. Prior to the above suspense date please return this completed form to:

Grant Services
Office of the Governor
1205 Pendleton Street
Columbia, South Carolina 29201

Signature Cheryl Griffith for

Name Danny L. Cromer

RESULTS OF AGENCY REVIEW

- [ ] PROJECT CONSISTENT WITH AGENCY PLANS AND POLICIES
- [ ] AGENCY REQUESTS CONFERENCE TO DISCUSS COMMENTS
- [ ] AGENCY COMMENTS ON PROPOSED APPLICATION AS FOLLOWS

No Comment

(Use additional sheets if necessary)

Signature James L. Darby, Jr. Date 5-3-90

Title Executive Director Phone 775-7381

South Carolina
Project Notification & Review System

RECEIVED

STATE APPLICATION IDENTIFIER
EIS-9003-004
~~5/4/90~~ 5/15/90
(SUSPENSE DATE)

MAY 1990
RECEIVED

Patricia Edmonds
Upper Savannah Council of Governments

The attached project notification is being referred to your agency in accordance with Presidential Executive Order 12372, "Intergovernmental Review of Federal Programs." The South Carolina Project Notification and Review System provides the opportunity for state and local reviews of federal and federally assisted development programs and projects. Please provide comments below, relating the proposed project to the plans, policies, and programs of your agency. All comments received will be reviewed and utilized by the State Clearinghouse in making the official state recommendation concerning the project to the cognizant federal agency. Any questions may be directed to this office by phone at 734-0493. Prior to the above suspense date please return this completed form to:

Grant Services
Office of the Governor
1205 Pendleton Street
Columbia, South Carolina 29201

Signature Cheryl Griffith for

Name Danny L. Cromer

RESULTS OF AGENCY REVIEW

- [ ] PROJECT CONSISTENT WITH AGENCY PLANS AND POLICIES
- [ ] AGENCY REQUESTS CONFERENCE TO DISCUSS COMMENTS
- [x] AGENCY COMMENTS ON PROPOSED APPLICATION AS FOLLOWS

No Comment

(Use additional sheets if necessary)

Signature W Bernard Mellman Date 5-4-90

Title Assistant Director Phone (803) 229-6627

South Carolina
Project Notification & Review System

STATE APPLICATION IDENTIFIER

EIS-9003-004

~~5/4/90~~ 5/15/90

(SUSPENSE DATE)

Johnny Brown
Pee Dee Regional Planning
and Development Council

The attached project notification is being referred to your agency in accordance with Presidential Executive Order 12372, "Intergovernmental Review of Federal Programs." The South Carolina Project Notification and Review System provides the opportunity for state and local reviews of federal and federally assisted development programs and projects. Please provide comments below, relating the proposed project to the plans, policies, and programs of your agency. All comments received will be reviewed and utilized by the State Clearinghouse in making the official state recommendation concerning the project to the cognizant federal agency. Any questions may be directed to this office by phone at 734-0493. Prior to the above suspense date please return this completed form to:

Grant Services
Office of the Governor
1205 Pendleton Street
Columbia, South Carolina 29201

Signature Cheryl Griffith for

Name Danny L. Cromer

RESULTS OF AGENCY REVIEW

- [ ] PROJECT CONSISTENT WITH AGENCY PLANS AND POLICIES
- [ ] AGENCY REQUESTS CONFERENCE TO DISCUSS COMMENTS
- [ ] AGENCY COMMENTS ON PROPOSED APPLICATION AS FOLLOWS

RECEIVED
GRANT SERVICES

(Use additional sheets if necessary)

Signature Johnny L. Brown

Date 5/15/90

Title Executive Director

Phone 669-3138

STATE OF WEST VIRGINIA

GOVERNOR'S OFFICE
OF
COMMUNITY AND INDUSTRIAL DEVELOPMENT

GASTON CAPERTON
GOVERNOR

Charleston, West Virginia 25305

April 5, 1990
File: PNRS-N
SAI-WV900308-011

Ms. Lynette Wigbels
NASA Headquarters/Code MF
Washington, D.C. 20546

Dear Ms. Wigbels:

The State Clearinghouse has reviewed National Aeronautics and Space Administration's environmental impact statement for the Space Station Freedom Program and has found it to be consistent with overall state goals and objectives.

This will certify that the requirements of the State's Intergovernmental Review Process have been met, and the State Process is in concurrence with the project. Clearinghouse approval does not constitute approval of the application by the funding agency.

Sincerely yours,

Fred Cutlip, Director
Community Development Division

FC:lgh