National Aeronautics and
Space Administration

Final Environmental Assessment for Launch of NASA Routine Payloads on Expendable Launch Vehicles from Cape Canaveral Air Force Station Florida and Vandenberg Air Force Base California

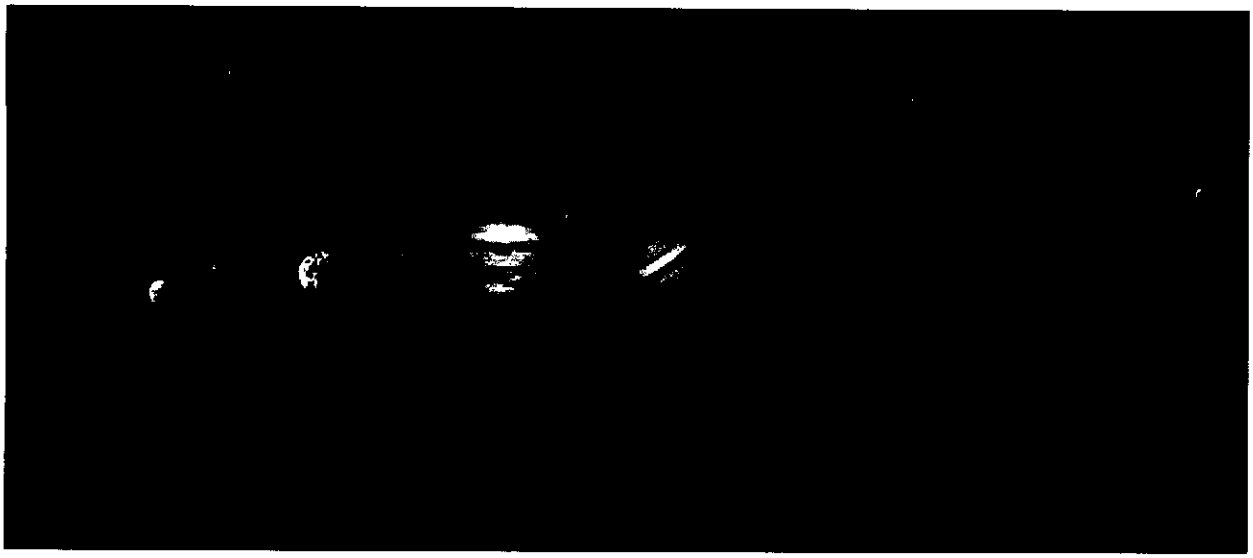

COVER PAGE

June 2002

Prepared for and in cooperation with:

National Aeronautics and Space
Administration
Washington, DC 20546-0001

Jet Propulsion Laboratory
California Institute of Technology

FINAL ENVIRONMENTAL ASSESSMENT FOR LAUNCH OF NASA ROUTINE PAYLOADS ON EXPENDABLE LAUNCH VEHICLES FROM CAPE CANAVERAL AIR FORCE STATION FLORIDA AND VANDENBERG AIR FORCE BASE CALIFORNIA

TITLE PAGE

Lead Agency: National Aeronautics and Space Administration

Proposed Action: Launch of NASA Routine Spacecraft as Payloads on Expendable Launch Vehicles from Cape Canaveral Air Force Station Florida and Vandenberg Air Force Base California during the Period 2002 through 2012.

For Further Information: Mark Dahl, Program Executive Code SM, NASA, Washington, DC 20546, USA

Date: June 2002

Abstract: This Final Environmental Assessment (FEA) addresses the National Aeronautics and Space Administration's (NASA's) proposed action to launch a variety of spacecraft missions over the period 2002 through 2012. The spacecraft used in these missions are considered routine payloads since the same threshold quantities and characteristics describe them all and since they would present no new or substantial environmental impacts or hazards. These scientific missions are needed for U. S. space and Earth exploration. All of the spacecraft covered by this FEA (referred to as routine payload spacecraft) would meet rigorously defined criteria ensuring that the spacecraft, their operation, and their decommissioning do not present any new or substantial environmental and safety concerns. The launches would occur from existing launch facilities at Cape Canaveral Air Force Station Florida and Vandenberg Air Force Base California.

(THIS PAGE INTENTIONALLY LEFT BLANK)

TABLE OF CONTENTS

TITLE PAGE I

TABLE OF CONTENTS III

LIST OF FIGURES VII

LIST OF TABLES IX

ACRONYMS, ABBREVIATIONS AND SYMBOLS XI

EXECUTIVE SUMMARY 1

PROPOSED ACTION 1
PURPOSE AND NEED FOR THE ACTION 2
ALTERNATIVES CONSIDERED 2
NO-ACTION ALTERNATIVE 3
SUMMARY OF ENVIRONMENTAL IMPACTS 3
SUMMARY 7

1 CHAPTER ONE -- PURPOSE AND NEED 9

1.1 PURPOSE OF THE PROPOSED ACTION 9
1.2 NEED FOR THE PROPOSED ACTION 10
1.3 PURPOSE OF THE NASA ROUTINE PAYLOAD SPACECRAFT FEA 11

2 CHAPTER TWO -- DESCRIPTION OF PROPOSED ACTION AND ALTERNATIVES 13

2.1 PROPOSED ACTION 13
2.1.1 Representative NASA Science Missions 17
2.1.2 Envelope Spacecraft Description 23
2.1.3 NASA Routine Payload Launch Vehicles 25
2.1.4 Space Launch Complexes 32
2.1.5 Payload Processing Facilities 35
2.2 NASA ROUTINE PAYLOAD CHECKLIST 37
2.3 ALTERNATIVES TO THE PROPOSED ACTION 41
2.4 NO ACTION 41

3 CHAPTER THREE – AFFECTED ENVIRONMENT 43

3.1 INTRODUCTION 43
3.2 COMMUNITY SETTING 43
3.2.1 CCAFS and KSC 43
3.2.2 VAFB 44
3.3 LAND USE AND AESTHETICS 47
3.3.1 CCAFS and KSC 47
3.3.2 VAFB 49
3.4 HAZARDOUS MATERIALS AND HAZARDOUS WASTE MANAGEMENT 50
3.4.1 CCAFS and KSC 51
3.4.2 VAFB 53
3.5 HEALTH AND SAFETY 54
3.5.1 CCAFS and KSC 55
3.5.2 VAFB 56
3.6 GEOLOGY 56

3.6.1 CCAFS and KSC 56
3.6.2 VAFB 57
3.7 WATER RESOURCES 58
3.7.1 CCAFS and KSC 59
3.7.2 VAFB 60
3.8 AIR QUALITY 61
3.8.1 Federal Regulatory Framework 61
3.8.2 CCAFS and KSC 62
3.8.3 VAFB 65
3.9 GLOBAL ENVIRONMENT 68
3.9.1 Troposphere 68
3.9.2 Stratosphere 68
3.10 NOISE 70
3.10.1 CCAFS and KSC 70
3.10.2 VAFB 71
3.11 ORBITAL DEBRIS 72
3.11.1 Characteristics of Orbital Debris 73
3.11.2 Hazards to Space Operations from Orbital Debris 73
3.12 BIOLOGICAL RESOURCES 74
3.12.1 CCAFS and KSC 74
3.12.2 VAFB 78
3.13 HISTORICAL/CULTURAL RESOURCES 82
3.13.1 CCAFS and KSC 82
3.13.2 VAFB 83
3.14 ENVIRONMENTAL JUSTICE 84
3.14.1 CCAFS and KSC 84
3.14.2 VAFB 84

4 CHAPTER FOUR – ENVIRONMENTAL CONSEQUENCES OF ALTERNATIVES 85

4.1 IMPACTS OF PROPOSED ACTION 85
4.1.1 Hazardous Materials and Hazardous Waste 86
4.1.2 Health and Safety 91
4.1.3 Land Resources 96
4.1.4 Water Resources 97
4.1.5 Air Quality 100
4.1.6 Stratospheric Ozone Layer 110
4.1.7 Noise and Sonic Boom 114
4.1.8 Orbital and Reentry Debris 116
4.1.9 Biological Resources 117
4.1.10 Cultural Resources 122
4.1.11 Economic Factors 122
4.1.12 Environmental Justice 122
4.1.13 Cumulative Effects 123
4.2 IMPACTS OF ALTERNATIVE ACTIONS 123
4.3 NO-ACTION ALTERNATIVE 123

5 CHAPTER FIVE – LIST OF PERSONS AND AGENCIES CONSULTED 125

5.1 PERSONS AND AGENCIES CONSULTED 125

6 CHAPTER SIX – REFERENCES 127

APPENDIX A – RELEVANT NEPA DOCUMENTATION A1

EXPENDABLE LAUNCH VEHICLE DOCUMENTATION A2
SPACECRAFT DOCUMENTATION A4
PAYLOAD PROCESSING FACILITIES A5

APPENDIX B – AFTOX MODEL PREDICTIONS FOR DISPERSION OF VAPORS FROM SPILLS OF PAYLOAD LIQUID PROPELLANTS **B1**

APPENDIX C – NASA ROUTINE PAYLOAD EVALUATION AND DETERMINATION PROCESS AND CHECKLIST **C1**

APPENDIX D – RESPONSES TO PUBLIC COMMENTS **D1**

(THIS PAGE INTENTIONALLY LEFT BLANK)

LIST OF FIGURES

Figure 2.1-1 Typical Process Flow for Routine Payload Spacecraft (L-xd = x days before launch) 16
Figure 2.1-2 CONTOUR Spacecraft is 2.3 m (7.5 ft) across and 1.9 m (6.2 ft) tall (excluding the antenna mast on the aft deck). 18
Figure 2.1-3 MESSENGER Spacecraft is 6.1 m (20 ft) with the solar panels extended. The MAG mast is 3.6 m (11.8 ft) tall. 20
Figure 2.1-4 Deep Impact Spacecraft has a flight system that is 3.3 m (10.8 ft) long, 1.7 m (5.6 ft) wide, and 2.3 m (7.5 ft) high. 22
Figure 2.1-5 Envelope Spacecraft 24
Figure 2.1-6 Atlas Family of Launch Vehicles 26
Figure 2.1-7 Delta Family of Launch Vehicles 28
Figure 2.1-8 Athena II, Taurus, Titan II, and Pegasus Launch Vehicles 32
Figure 3.2-1 Regional Map of CCAFS and KSC (NASA, 1998) 44
Figure 3.2-2 Regional Map of VAFB (NASA, 1998) 46

(THIS PAGE INTENTIONALLY LEFT BLANK)

LIST OF TABLES

Table 2.1-1 Summary of CONTOUR Subsystems 19
Table 2.1-2 Summary of MESSENGER Subsystems 21
Table 2.1-3 Summary of Deep Impact Flyby (F) and Impactor (I) Systems 23
Table 2.1-4 Summary of ES Subsystems and Envelope Payload Characteristics (EPC) 25
Table 2.2-1 Launch Vehicles and Launch Pads 38
Table 3.8-1 National and Florida Ambient Air Quality Standards (USAF, 1998) 63
Table 3.8-2 Ambient Air Concentrations for Criteria Pollutants Near CCAFS and KSC (USAF, 2000a) 64
Table 3.8-3 National and California Ambient Air Quality Standards (USAF, 1998) 66
Table 3.8-4 Ambient Air Concentrations for Criteria Pollutants at VAFB (USAF, 2000a) 67
Table 3.10-1 Measured Delta II Sound Levels, July 1992 71
Table 3.10-2 Measured Titan IV Sound Levels, August 1993 72
Table 3.12-1 Threatened, Endangered, and Candidate Species Occurring or Potentially Occurring at CCAFS, Florida (AEROSPACE, 2000b) 76
Table 3.12-2 Threatened, Endangered, and Species of Concern Occurring or Potentially Occurring at VAFB, California (AEROSPACE, 2000a) 80
Table 4.1-1 Payload Processing Materials of a Routine Payload Spacecraft 87
Table 4.1-2 Annual Hazardous Wastes Associated with Payload Processing (USAF, 1995c) 88
Table 4.1-3 Hazardous Materials Used per Atlas V 500 Launch 90
Table 4.1-4 Estimated Hazardous Waste Generated per Atlas V 500 Launch (USAF, 2000a) 91
Table 4.1-5 Mean Hazard Distances to SPEGL (1-Hr Average) Exposure Limits as Predicted by AFTOX for Payload Maximum Liquid Propellant Spills at CCAFS and KSC 103
Table 4.1-6 Mean Hazard Distances to SPEGL (1-Hr Average) Exposure Limits as Predicted by AFTOX for Payload Maximum Liquid Propellant Spills at VAFB 104
Table 4.1-7 Air Emissions (tons) Per Launch of Candidate Vehicles Into Lowest 3,000 Feet of Atmosphere 106
Table 4.1-8 Maximum Downwind Concentrations for Nominal Launches at CCAFS 106
Table 4.1-9 Maximum Downwind Concentrations for Nominal Launches at VAFB 106
Table 4.1-10 Peak Concentrations and 60-Minute Mean Concentrations for a Catastrophic Launch Pad Failure (Deflagration) of the Delta II 7925 at CCAFS during Worst Case Meteorological Conditions 108
Table 4.1-11 Peak Concentration and 60-Minute Mean Concentration Predictions for Titan II Launch Abort Emissions at VAFB Using a Hypothetical No Wind Shear Meteorological Profile 108
Table 4.1-12 Launch Vehicle Emissions 112
Table 4.1-13 Typical Launch Vehicle Noise Levels at 1.6 kilometers (1 Mile) 115

(THIS PAGE INTENTIONALLY LEFT BLANK)

ACRONYMS, ABBREVIATIONS AND SYMBOLS

°C	degrees Celsius
°F	degrees Fahrenheit
30SW/CES	30th Space Wing/Civil Engineering Squadron
45SW/CES	45th Space Wing/Civil Engineering Squadron
A-50	Aerozine-50
A-Hr	Amp Hour
ACGIH	American Conference of Governmental Industrial Hygienists
ACS	Attitude Control Sensor
AFB	U.S. Air Force Base
AFI	U.S. Air Force Instruction
AFPD	U.S. Air Force Policy Directive
AFOSH	U.S. Air Force Occupational Safety and Health
AFTOX	U.S. Air Force Toxics Model
AIRFA	American Indian Religious Freedom Act
Al_2O_3	Aluminum Oxide
ANSI	American National Standards Institute
AP	Ammonium Perchlorate
ARPA	Archaeological Resources Protection Act
AWSPL	A-Weighted Sound Pressure Levels
BACT	Best Available Control Technology
Be	Beryllium
BMPs	Best Management Practices
CAA	Clean Air Act
CAAA	Clean Air Act Amendments
CAP	Collection Accumulation Point
CARB	California Air Resources Board
CBC	Common Booster Core
CCAFS	Cape Canaveral Air Force Station
CCB	Common Core Booster
CCEMP	Consolidated Comprehensive Emergency Management Plan
CCS	California Commercial Spaceport
C&DH	Command and Data Handling
CDR	Critical Design Review
CEQ	Council on Environmental Quality
CERCLA	Comprehensive Environmental Response, Compensation, and Liability Act
CFCs	Chlorofluorocarbons
CFI	Comet Forward Analyzer
CFR	Code Federal Regulations
Cl	Chlorine
CIDA	CONTOUR Impact Dust Analyzer
CLSRB	Current Launch Schedule Review Board
CNEL	Community Noise Equivalent Level
CNS	Canaveral National Seashore
CO2	Carbon Dioxide
CO	Carbon Monoxide
COE	U. S. Army Corp of Engineers
CONTOUR	COmet Nucleus TOUR
CRISP	CONTOUR Remote Imager and Spectrograph
CWA	Clean Water Act
CZMA	Coastal Zone Management Act
dB	Decibel
dBA	A-weighted Decibels
DCG	Disaster Control Group
DEA	Draft Environmental Assessment
DoD	Department of Defense
DOT	Department of Transportation
DNL	Day-Night Average Sound Level
DPF	DSCS Processing Facility
DRMO	Defense Reutilization Marketing Office
DSCS	Defense Secure Communication Satellite
E	Endangered
EA	Environmental Assessment
EED	Electro Explosive Device
EEGL	Emergency Exposure Guidance Level
EELV	Evolved Expendable Launch Vehicle
EIS	Environmental Impact Statement
ELV	Expendable Launch Vehicle
EMO	Environmental Management Office
ENVVEST	Environmental Investment Program
EO	Executive Order

EPA	Environmental Protection Agency
EPC	Envelope Payload Characteristics
EPCRA	Emergency Planning and Community Right-to-know Act
EPPS	Energetic Particle and Plasma Spectrometer
EPS	Energetic Particle Spectrometer
ES	Envelope Spacecraft
EWR 127-1	Eastern and Western Range Safety Policies and Processess
FAC	Florida Administrative Code
FAAQS	Florida Ambient Air Quality Standards
FCREPA	Florida Commission on Rare and Endangered Plants and Animals
FD	Federally delisted
FDA	Food and Drug Administration
FDCA	Florida Department of Community Affairs
FDEP	Florida Department of Environmental Protection
FEA	Final Environmental Assessment
FIPS	Fast Imaging Plasma Spectrometer
FONPA	Finding Of No Practical Alternative
FONSI	Finding Of No Significant Impact
GaAs	Gallium Arsenide
gal	gallons
GEM	Graphite Epoxy Motor
GRNS	Gamma-Ray and Neutron Spectrometer
GRS	Gamma-Ray Spectrometer
GSE	Ground Support Equipment
GTO	Geosynchronous Transfer Orbit
H_2	Diatomic Hydrogen
H_2O	Water
H_2SO_4	hydrogen sulfate
HAP	Hazardous Air Pollutant
HAZMAT	Hazardous Materials
HCl	Hydrogen Chloride
HFCs	Hydrofluorocarbons
HGA	High Gain Antenna
HMTA	Hazardous Materials Transportation Act
HOx	Hydrogen Oxides
HPF	Hazardous Processing Facility
HRI	High Resolution Instrument
HSWA	Hazardous and Solid Waste Amendments
HTPB	Hydroxyl-Terminated Polybutadiene
Hz	Hertz
in	inches
IAEA	International Atomic Energy Agency
ICBM	Intercontinental Ballistic Missile
IDLH	Immediately Dangerous to Life or Health
IEEE	Institute of Electrical and Electronic Engineers
IIP	Instantaneous Surface Impact Point
IMS	Incident Management System
IPA	Isopropyl Alcohol
IR	Infrared
ITS	Impactor Targeting System
JPC	Joint Propellants Contractor
JPL	Jet Propulsion Laboratory
kg	kilogram
kg/m^2	kilograms per square meter
kg/yr	kilograms per year
km	kilometer
km/s	kilometers per second
KHB	KSC Handbook
KSC	Kennedy Space Center
kW	kilowatt
lb	pound
lb/ft^2	pounds per square foot
LBS	Launch Base Support
LC	Launch Complex
LDCG	Launch Disaster Control Group
LEO	Low Earth Orbit
LH2	Liquid Hydrogen
LIDAR	Light Detection And Ranging
LiSOC	Lithium-thionyl chloride
LOX	Liquid Oxygen
LV	Launch Vehicle
m	meters
mi	miles
mi/s	mile per second
mg/l	milligrams per liter
mg/m^3	milligrams per cubic meter
mph	miles per hour
MACT	Maximum Available Control Technology
MAG	Magnetometer
MASCS	Mercury Atmospheric and Surface Composition Spectrometer
MC	Management Concern
MDIS	Mercury Dual Imaging System
MESSENGER	MErcury Surface Space ENvironment, GEochemistry, and Ranging
MINWR	Merritt Island National Wildlife Refuge
MLA	Mercury Laser Altimeter

MMH	Mono Methyl Hydrazine
MMPA	Marine Mammal Protection Act
MPE	Maximum Permissible Exposure
MPPF	Multi-payload Processing Facility
MSL	Mean Sea level
mW	milli-Watt
N2	Diatomic Nitrogen
N_2H_4	Hydrazine
N_2O_4	Nitrogen Tetroxide
Nd:YAG	Neodymium: Yttrium, Aluminum, Garnet (laser rod)
NiH_2	Nickel-hydrogen
NAAQS	National Ambient Air Quality Standards
NAGPRA	Native American Graves Protection and Repatriation Act
NAS	National Academy of Sciences
NASA	National Aeronautics and Space Administration
NDMA	Nitrosodimethylamine
NEPA	National Environmental Policy Act
NESHAP	National Emissions Standards for Hazardous Air Pollutants
NFSAM	Nuclear Flight Safety Assurance Manager
NGIMS	Neutral Gas and Ion Spectrometer
NHPA	National Historic Preservation Act
NiCd	Nickel Cadmium
NMFS	National Marine Fisheries Service
NMI	NASA Management Instruction
NMP	New Millennium Program
NOAA	National Oceanic and Atmospheric Administration
NOHD	Non Optical Hazard Distance
NOx	Oxides of Nitrogen
NPD	NASA Policy Directive
NPDES	National Pollutant Discharge Ellimination System
NPG	NASA Policy Guidance
NPS	National Park Service
NRHP	National Register of Historic Places
NSS	NASA Safety Standard
NTO	Nitrogen Tetroxide (N_2O_4)
O2	Diatomic Oxygen
O3	Ozone
ODS	Ozone Depleting Substance
OFW	Outstanding Florida Water
OH	Hydroxide
Oplan	Operations Plan
OSHA	Occupational Safety and Health Administration
OSMA	Office of Safety and Mission Assurance
OSPL	Overall Sound Pressure Level
P	Protected
PAFB	Patrick Air Force Base
Pb	Lead
PEL	Permissible Exposure Limit
pH	hydrogen ion concentration
PHSF	Payload Hazardous Servicing Facility
PIK	Precision Injection Kit
PM2.5	Particulate Matter < 2.5 microns
PM10	Particulate Matter < 10 microns
PPA	Pollution Prevention Act
PPF	Payload Processing Facility
ppm	parts per million
PPMP	Pollution Prevention Management Program
PPPG	Pollution Prevention Program Guide
PSD	Prevention of Significant Deterioration
psf	pounds per square foot
pt	pint
PT	Proposed Threatened
R	Rare
RCRA	Resource Conservation and Recovery Act
REC	Record of Environmental Consideration
REEDM	Rocket Exhaust Effluent Diffusion Model
RF	Radio Frequency
RHU	Radioisotope Heater Units
RMR	Radioactive Materials Report
RP-1	thermally stable kerosene
RPC	Routine Payload Checklist
RS	Radio Science
RTG	Radioisotope thermoelectric generators
RWD	Report of Waste Discharge
RWQCB	Regional Water Quality Control Board
S	Sensitive
S/A	Similarity of appearance to a listed species
SAEF-2	Spacecraft Assembly and Encapsulation Facility Number 2
SAP	Satellite Accumulation Point
SBCAPCD	Santa Barbara County Air Pollution Control District
SC	Species of Concern
SCAPE	Self-Contained Atmospheric Protection Ensemble

SCCAB	South Central Coast Air Basin
SCS	Soil Conservation Service
SEL	Sound Exposure Level
SHPO	State Historic Preservation Officer
SJRWMD	St. John's River Water Management District
SLAMS	State and Local Air Monitoring Systems
SLC	Space Launch Complex
SLF	Shuttle Landing Facility
SO_2	Sulfur Dioxide
SLM	Space Launch Manifest
SMAB	Solid Motor Assembly Building
SOP	Standard Operating Procedures
SPCC	Spill Prevention Control and Countermeasures
SPEGL	Short-term Public Emergency Guidance Level
SPIF	Spacecraft Processing and Integration Facility
SRM	Solid Rocket Motor
SSC	Species of Special Concern
SSRM	Strap-on Solid Rocket Motor
STEL	Short Term Exposure Limit
SWRCB	State Water Resources Control Board
T	Threatened
Th	Thorium
THA	Toxic Hazard Assessment
THC	Toxic Hazard Corridor
TLV	Threshold Limit Value
TRCP	Toxic Release Contingency Plan
TRI	Toxic Chemical Release Inventory
TSCA	Toxic Substances Control Act
TSDF	Treatment, Storage, and Disposal Facility
UDMH	Unsymmetrical Dimethyl-Hydrazine
µg/m3	micrograms per cubic meter
USAF	United States Air Force
USFWS	United States Fish and Wildlife Service
UV	Ultraviolet
VAFB	Vandenberg Air Force Base
VIS	Visible
VOC	Volatile Organic Compounds
VPF	Vertical Processing Facility
W	Watt
WDR	Waste Discharge Requirement
Xe	Xenon
XRS	X-ray Spectrometer

EXECUTIVE SUMMARY

PROPOSED ACTION

This Final Environmental Assessment (FEA) addresses the National Aeronautics and Space Administration's (NASA's) proposed action to launch a variety of spacecraft missions on expendable launch vehicles (ELVs) over the period 2002 through 2012. The spacecraft used in these missions could be considered routine payloads as described by a set of threshold quantities and characteristics that would present no new or substantial environmental impacts or hazards. These scientific missions are needed for U. S. space and Earth exploration. All of the spacecraft covered by this FEA (referred to hereafter as routine payload spacecraft) would meet rigorously defined criteria ensuring that the spacecraft, their operation, and their decommissioning do not present any new or substantial environmental and safety concerns.

The proposed action is comprised of preparing and launching missions designated as NASA routine payload spacecraft. The design and operational characteristics and, therefore, the environmental impacts of routine payload spacecraft would be rigorously bounded. Routine payload spacecraft would utilize materials, launch vehicles, facilities, and operations that are normally and customarily used at Vandenberg Air Force Base (VAFB), Cape Canaveral Air Force Station (CCAFS), and Kennedy Space Center (KSC). The routine payload spacecraft would use these materials, launch vehicles, facilities, and operations only within the scope of activities already approved or permitted.

Under the proposed action, spacecraft defined as routine payloads would be launched from Vandenberg Air Force Base (VAFB), California, or Cape Canaveral Air Force Station (CCAFS), Florida. Pre-launch spacecraft processing, including final assembly, propellant loading, and checkout of payload systems would be performed in Payload Processing Facilities (PPFs) located at VAFB, CCAFS, or Kennedy Space Center (KSC). After processing, the spacecraft would be transported to either a Space Launch Complex (SLC) at VAFB or a Launch Complex (LC) at CCAFS where they would be integrated with and launched by an expendable launch vehicle (ELV).

The ELVs proposed for launching the routine payload spacecraft represent all domestic (U.S.) ELVs that would be suitable for launching the routine payload spacecraft, would be available during the 2002 to 2012 period, have documented environmental impacts, and would utilize existing launch facilities. The ELVs included in this action include the following: the Atlas series, Delta series, Taurus, Athena series, Pegasus XL, and Titan II. These launch vehicles would accommodate the desired range of payload masses, would include the

needed trajectory capabilities, and would provide highly reliable launch services. Individual ELVs would be carefully matched to the launch requirements of each particular routine payload spacecraft.

PURPOSE AND NEED FOR THE ACTION

NASA's mission includes Earth exploration, space exploration, technology development, and scientific research. U. S. space and Earth exploration is integral to NASA's strategic plan for carrying out its mission. The two NASA enterprises involved in Earth and space exploration are the Earth Sciences Enterprise and the Space Sciences Enterprise. NASA is also committed to a program for the further development of advanced, low-cost technologies for exploring and utilizing space.

To fulfill these objectives, a continuing series of scientific spacecraft would need to be designed, built, and launched into Earth orbit or towards other bodies in the Solar System. These spacecraft would flyby, encounter, orbit about, land on, or impact with these bodies to collect various scientific data that would be transmitted to Earth via radio for analysis. The scientific missions associated with NASA routine payload spacecraft could not be accomplished without launching the missions.

ALTERNATIVES CONSIDERED

The scope of this FEA includes all spacecraft that would meet specific criteria on their design and launch, would accomplish the requirements of NASA's research objectives, and would not present new or substantial environmental impacts or hazards. These spacecraft would meet the limitations set forth in the Routine Payload Checklist (RPC), which was developed to delimit the characteristics and environmental impacts of this group of spacecraft. Preparation and launch of all spacecraft that are members of the class of routine payloads would not have substantial environmental impact. Alternative spacecraft designs that exceed the limitations of the RPC may have new or substantial environmental impacts or hazards and would not be covered by this FEA.

The nature of environmental impacts, payload processing, launch sites, and other related information for foreign launch systems are generally not as well known or as well documented as for launches from the U. S. In addition, use of non-U.S. launch vehicles requires individual consideration, review, and additional documentation. Therefore, foreign launch vehicles were not considered to be reasonable alternatives for the purpose of this routine payload spacecraft FEA.

NO-ACTION ALTERNATIVE

The No-Action alternative would mean that the NASA would not launch scientific spacecraft missions defined as routine payloads using specific criteria and thresholds. NASA would then propose spacecraft missions for individualized review under the National Environmental Policy Act (NEPA). Duplicate analyses and redundant documentation would not present any new information or identify any substantially different environmental impacts.

SUMMARY OF ENVIRONMENTAL IMPACTS

Potential environmental impacts, including cumulative impacts, of the proposed action are summarized in this section. A more extensive discussion is presented in Chapter 4. NASA missions covered by this FEA would be manifested at VAFB or CCAFS and would be within the total number of launch operations previously analyzed in launch vehicle or launch site NEPA documents. Thus, no additional direct or cumulative effects are anticipated from routine payload spacecraft launches.

Air Quality

Ground operations during routine payload spacecraft processing and launch vehicle preparation would temporarily create very small increases in emissions from electrical power generators, vehicle traffic, and hazardous air pollutants (HAPs). These increases would be within the scope of emissions from ongoing and routine operations at VAFB, CCAFS, and KSC and would not substantially impact local air quality, either directly or cumulatively.

The air quality impacts of ongoing and routine operations at the launch facilities have been considered in previous NEPA documentation (Appendix A). With respect to local air quality, only VAFB is in a non-attainment area for ozone. The conformity analysis under the Clean Air Act Section 176 indicates that the proposed action would not contribute substantially to the formation of ozone and ozone precursors.

At the VAFB and CCAFS launch sites, combustion emissions from launch vehicles would dissipate before reaching sensitive human, flora, or fauna receptors. Previous NEPA documentation, which are largely based on the Rocket Exhaust Effluent Diffusion Model (REEDM), show that launching routine payload spacecraft would result in gas and particle concentrations below all applicable Federal, State and local standards.

Previous NEPA documentation show that upper atmospheric impacts would be limited to a miniscule amount of global ozone loss from rocket combustion emissions. These analyses included cumulative effects.

Public Health and Safety

Routine payload spacecraft may carry small quantities of encapsulated radioactive materials for instrument calibration or similar purposes. Use of these radioactive materials would be reviewed and approved by the NASA Nuclear Flight Safety Assurance Manager (NFSAM) prior to launch. The NFSAM would certify that preparation and launching of routine payload spacecraft that carry small quantities of radioactive materials would not present a substantial risk to public health or safety.

Routine payload spacecraft may carry a variety of low-power radio transmitters (for telemetry, tracking, and data downlink) and high-power radar transmitters (for remote studies of planetary (including Earth) surfaces). The power and operating characteristics of these transmitters would be within defined limits to assure that their operation meets IEEE standards for human health and safety and would present no substantial environmental impact, health hazard, or safety hazard on the ground during space operations.

Routine payload spacecraft may carry low power (Class I) lasers as part of a spacecraft subsystem. Routine payload spacecraft may carry medium and high power (Class IIIB and Class IV) lasers as part of scientific instrumentation that have the capability to observe the earth. For medium and high power lasers, NASA adherence to ANSI Z136.1-2000 (American National Standard for Safe Use of Lasers) and ANSI Z136.6-2000 (Safe Use of Lasers Outdoors) standards would ensure that the lasers do not pose a health or safety hazard.

Safety hazards associated with activities required to prepare routine payload spacecraft for launch are within the scope of documented and mitigated hazards at VAFB, CCAFS, and KSC. Hazards to launch site personnel and to the public from catastrophic payload and launch vehicle failures would be within the scope of such hazards mitigated by comprehensive Range Safety design and operating requirements on flight and ground equipment. Remaining risks would be minimized by controlling access of nonessential personnel and by training and protection of essential personnel.

Hazardous Material

Hazardous and solid waste management activities would comply with all applicable Federal, State, and local regulations. The use of hazardous materials for spacecraft processing would be minimized through the use of "pharmacy" control systems, that is, systems that monitor quantities of specific chemicals that would be checked out and unused portions would be returned for reuse, recycling, or disposal. Adherence to appropriate United States Air Force (USAF) and NASA safety procedures would minimize the potential for accidental release of liquid propellants. Liquid propellants [kerosene (RP-1), liquid oxygen (LOX), liquid hydrogen, hydrazine (N_2H_4), unsymmetrical dimethylhydrazine (UDMH), monomethylhydrazine (MMH), and nitrogen tetroxide (NTO)] would be stored in tanks near the launch pad within appropriate cement containment basins.

NASA has issued and will implement a plan to manage hazardous materials in compliance with the Resource Conservation and Recovery Act (RCRA). The plan, NASA Procedures and Guidelines NPG 8820.3 (NPG 8820.3, 1999) Pollution Prevention, assures that any accumulated hazardous materials are properly handled and characterized, and that appropriate methods and means for spill control are in place.

Land Resources

Routine payload missions would not require the construction of new facilities or industrial infrastructure so that new excavation would not be required. The near-field effects of deposition of emissions from combustion of launch vehicle fuels would be within the scope of ongoing and acceptable launch activity at CCAFS and VAFB.

Water Resources

Existing water utility infrastructure would be used to meet miscellaneous needs of payload processing, launch vehicle preparation, and fire or explosion control. There would be no related impacts to the ground water, surface water, or wastewater processing systems.

Deep ocean release of toxic materials such as residual propellants, hydraulic fluids, and eroding metals from spent booster structures would not produce substantial concentrations due to the small amount of such materials and the large quantity of water available for dilution in the deep ocean environment.

Noise and Sonic Boom

Noise associated with routine payload spacecraft processing would be within the scope of normal and routine activities at the PPFs and launch site facilities as discussed in previous NEPA launch vehicle documentation (Appendix A.)

Substantial launch noise from routine payload launch vehicles occurs for only a brief period at liftoff and would not present a direct or cumulative impact to nearby communities beyond the impact of normal and accepted launch activities.

Biological Resources

Any action that may affect Federally listed species (Threatened or Endangered) or their critical habitats requires consultation with the U.S. Fish and Wildlife Service (USFWS) under Section 7 of the Endangered Species Act of 1973 as amended. Any action that may affect marine mammals or their habitat requires consultation with the National Marine Fisheries Service (NMFS) under the Marine Mammal Protection Act (MMPA) of 1972 as amended. In addition, potential effects on Essential Fish Habitat in offshore waters requires consultation and analysis by NMFS under the Magnuson-Stevens Fisheries Conservation and Management Act (MSFCMA) of 1996. The USFWS and the NMFS have previously reviewed those actions that would be associated with the launch of proposed routine payload launch vehicles from VAFB and CCAFS. Routine payload processing and launch activities would not require any permits

and/or mitigation measures beyond existing permits and mitigation measures already required, or in coordination, for VAFB and CCAFS launches.

Routine payload launches would not have an impact on VAFB or CCAFS terrestrial or aquatic biota, including threatened and endangered species, beyond that already permitted and mitigated under MMPA for ongoing launch activities.

Cultural Resources

Routine payload activities would not affect archeological, historic, or cultural properties listed or eligible for listing in the National Register of Historic Places (NRHP). Archeological and paleontological sites have been identified and would not be affected by routine payload activities.

Economic Factors

Routine payload activities would cause no adverse or beneficial impacts on community facilities, on services, or on existing land uses. The number and type of pre-launch and launch activities would be within the scope of operations previously analyzed in existing NEPA documentation for VAFB, CCAFS, and KSC.

Environmental Justice

Routine payload activities would be within the scope and number of launches previously analyzed in NEPA documentation for VAFB, CCAFS, and KSC, which would have no high and disproportionate effects on minority and low-income populations. No substantial environmental effects are likely to occur outside launch site boundaries, thus no high and disproportionate impact is anticipated to occur to any minority or low-income population.

Orbital Debris

Routine payload mission operations must comply with all requirements of NASA Policy Directive NPD 8710.3 (NASA Policy for Limiting Orbital Debris Generation) and NASA Safety Standard NSS 1740.14 (Guidelines and Assessment Procedures for Limiting Orbital Debris), which specify techniques to mitigate the generation of orbital debris from spacecraft, including end-of-mission spacecraft disposal.

Cumulative Effects

Routine payload activities would not cause the annual number of launches for the proposed launch vehicles to exceed the number analyzed and approved in previous NEPA documentation for VAFB and CCAFS. Therefore, the proposed action would not result in cumulative impacts in excess of those previously documented and approved.

SUMMARY

Spacecraft that comply with the Routine Payload Checklist (Section 2.2 and Appendix C) would utilize materials, quantities of materials, launch vehicles, and operational characteristics that are consistent with normal and routine spacecraft preparation and flight activities at VAFB, CCAFS, and KSC. Therefore, the environmental impacts of launching routine payload spacecraft would fall within the range of routine, ongoing, and previously documented impacts associated with approved programs that have been determined not to be significant (Appendix A).

(THIS PAGE INTENTIONALLY LEFT BLANK)

1 CHAPTER ONE -- PURPOSE AND NEED

GENERAL

The National Aeronautics and Space Administration (NASA) in compliance with the National Environmental Policy Act of 1969, as amended (NEPA) (42 U.S.C. 4321 *et seq.*), the Council on Environmental Quality (CEQ) Regulations for Implementing the Procedural Provisions of NEPA (40 CFR Parts 1500-1508), and NASA policy and procedures (14 CFR Part 1216) has prepared this Final Environmental Assessment (FEA) for the launch of scientific spacecraft meeting specific criteria (Envelope Payload Characteristics – Table 2.1.4) consistent with a description of NASA routine payloads based on the experience of NASA and previous environmental reviews. The purpose of these spacecraft is to gather scientific information and to demonstrate advanced, low-cost technologies for exploring and utilizing space that meet the objectives of NASA's Earth Science and Space Science Strategic Enterprises. The primary characteristic of this information is that it cannot be obtained using Earth-based instruments. Topics discussed in this FEA include, but are not limited to, definition and objectives of the proposed action, alternatives to the proposed action (including the no action alternative), and the potential environmental impacts of each action.

1.1 PURPOSE OF THE PROPOSED ACTION

The National Aeronautics and Space Act of 1958, as amended (42 U.S.C. 2451(d)(1)(5)) establishes a mandate to conduct activities in space that contribute substantially to "[t]he expansion of human knowledge of the Earth and of phenomena in the atmosphere and space", and to "[t]he preservation of the role of the United States as a leader in aeronautical and space science and technology and in the application thereof to the conduct of peaceful activities within and outside the atmosphere." In response to this mandate, NASA, in coordination with the National Academy of Sciences (NAS), has developed a prioritized set of science objectives to be met through a long-range program of spacecraft missions. As part of the U. S. space and Earth exploration effort, these missions are designed to be conducted in a specific sequence based on technological readiness, launch opportunities, timely data return, and a balanced representation of scientific disciplines. These missions are anticipated to have characteristics consistent with the description of a NASA routine payload spacecraft (see Table 2.1.4 for Envelope Payload Characteristics) based on prior NASA experience and associated NEPA analyses.

By collecting a range of unique scientific and engineering data from space and transmitting the data to the Earth, the routine payload spacecraft would support NASA's primary objectives:

1) To understand the origin, evolution, and present state of the Solar System;
2) To establish the scientific and technical database required for undertaking major human endeavors in space, including the survey of near-Earth resources and the characterization of planetary surfaces and atmospheres; and
3) To create the capability to forecast and assess the health of the Earth system.

Examples of the kinds of data that would be collected by routine payload spacecraft for transmission to Earth in order to meet these objectives include:

1) Multi-spectral and high resolution images of planetary surfaces and atmospheres;
2) Measurements of planetary geophysical characteristics such as magnetic field strength, mass properties, and dynamical state;
3) Detailed measurement of the composition, meteorology, and radiative properties of the Earth's atmosphere;
4) Measurement of the Sun's electromagnetic and particle radiation and their interaction with the Earth.

1.2 NEED FOR THE PROPOSED ACTION

NASA cannot meet the specific objectives of U.S. space and Earth exploration using Earth-based instrumentation alone. Ground-based instruments [for example, cameras, telescopes, Light Detection And Ranging (LIDARs), spectrographs, etc.] lack global coverage, are limited in resolution and sensitivity by atmospheric conditions, and cover only limited portions of the spectrum. Sounding rockets, without orbiting spacecraft instrumentation, are limited to a few minutes of data collection and also lack global coverage. Balloons not only have limited altitude coverage and flight duration but also cannot reach beyond the Earth's middle atmosphere. Furthermore, Earth-based techniques are unable to measure certain planetary geophysical data that can only be obtained in-situ (i.e., within an atmosphere) or by positioning instrumentation near enough to planetary environments to ensure sufficient instrument sensitivity and resolution. Therefore, NASA must use a variety of scientific spacecraft that must be designed and launched to collect these data. These spacecraft would carry instruments into Earth orbit or to other planetary bodies where they would collect the required data over extended periods of time and transmit the data to Earth.

1.3 PURPOSE OF THE NASA ROUTINE PAYLOAD SPACECRAFT FEA

To reduce data and excessive paperwork, CEQ regulations encourage Federal agencies to analyze the potential environmental impacts of similar actions in one environmental assessment. Many of the space exploration missions planned by NASA over the next decade would require spacecraft that are similar in overall design, materials, and engineering as well as instrument or payload systems. Furthermore, these spacecraft would usually be launched using an expendable launch vehicle (ELV) selected from a relatively small group of domestic launch vehicles. The missions would also have other common elements including spacecraft pre-launch processing, launch scenarios, and resource use.Once the design for a proposed NASA science mission is sufficiently well determined (i.e., Phase B studies), NASA could evaluate the proposed design against the Routine Payload Checklist (Section 2.2 and Appendix C) to determine if the proposed design meets the description of a routine spacecraft payload. If the mission meets the definition of a routine payload, this finding would be documented by processing a Record of Environmental Consideration (REC) in accordance with NASA's NEPA implementing procedures and guidance, citing this FEA. If any one or more characteristics are outside or not included in the Envelope Payload Characteristics (EPCs) specified in Table 2.1-4 and Appendix C, further environmental analysis would be conducted, in consultation with NASA Headquarters as necessary and appropriate.

This FEA would be subject to regular review every three years, beginning in 2005, to maintain currency with relevant rules, regulations, scientific findings, space technologies, and the evolving requirements of NASA's space research program.

(THIS PAGE INTENTIONALLY LEFT BLANK)

2 CHAPTER TWO -- DESCRIPTION OF PROPOSED ACTION AND ALTERNATIVES

GENERAL

NASA proposes to design, launch, and operate a variety of scientific spacecraft that can be considered to be routine, as defined by the Routine Payload Checklist. The specific quantities, thresholds, and criteria in the Routine Payload Checklist encompass spacecraft that use accepted materials, methods, and techniques and that would present no new or substantial environmental impacts or hazards. These spacecraft would be launched using domestic (U.S.) Expendable Launch Vehicles (ELVs) whose impacts have been examined in previous EAs and EISs (Appendix A). By meeting the terms of the Routine Payload Checklist (Section 2.2 and Appendix C) and by having no new or substantial environmental impacts or hazards, spacecraft would be considered routine payloads and so fall under the scope of this NASA routine payload spacecraft Final Environmental Assessment (FEA). To illustrate the range of characteristics of such spacecraft and associated environmental impacts, this FEA analyzes three representative planetary missions that would be launched between 2002 and 2004: the Mercury Surface Space Environment, Geochemistry, and Ranging (MESSENGER), COmet Nucleus TOUR (CONTOUR), and Deep Impact missions.

2.1 PROPOSED ACTION

NASA proposes to carry out a variety of missions involving the launch of spacecraft over the next decade. These spacecraft would perform scientific study of the Earth, other bodies in the Solar System and the Cosmos, and would further the development of advanced, low-cost technologies for exploring and utilizing space. These spacecraft and their associated launches (i.e., missions) would be considered to be routine if they would present no new or substantial environmental hazards, and their hazards would not exceed the specific thresholds described by the Routine Payload Checklist (Section 2.2 and Appendix C). Such missions are referred to as NASA routine payload spacecraft.

Once a sufficiently detailed design concept is proposed for a NASA science mission, NASA would evaluate the proposed design against the NASA Routine Payload Checklist (RPC) to determine if the proposed design is within the definition of a routine payload as described in this FEA. If the mission were to meet the requirements of the NASA Routine Payload Process and Checklist (Appendix C), a finding of routine payload would be documented by processing a Record of Environmental Consideration (REC) in accordance with NASA's NEPA implementing procedures and guidance, citing this FEA. If the proposed mission

were found to be inconsistent with the NASA Routine Payload categorization, plans would begin for preparation of additional NEPA documentation.

These routine payload spacecraft would be placed into Earth orbit or into Earth-escape trajectories (i.e., solar orbit) using one of a group of ELVs routinely and exclusively launched from Cape Canaveral Air Force Station (CCAFS) and Vandenberg Air Force Base (VAFB). The use of these ELVs and of these launch ranges for the launch of the routine payload spacecraft have been analyzed and are within the scope of existing NEPA documents for operations at these launch facilities (Appendix A). The specific ELV and trajectory selected for a particular mission would depend on the specific mission objectives and requirements for that routine payload mission. For quality control and safety reasons, proposed routine payload spacecraft would only be prepared for launch at KSC (launch processing center for CCAFS) or VAFB and their associated facilities.

Each routine payload spacecraft would be designed to meet specific and unique mission requirements but all spacecraft would be assembled from similar components (subsystems). These subsystems could be grouped according to function:

- mechanical structure
- propulsion
- communication
- control, avionics, data storage
- power generation, storage, and distribution
- science and engineering instrumentation

Each subsystem would be made of materials and components commonly used in the space industry. Use of these subsystems in routine payload spacecraft would pose no adverse environmental or health impacts beyond those already analyzed and documented in existing NEPA analyses.

All routine payload spacecraft would follow similar procedures to prepare for launch. Routine payload spacecraft would be designed, fabricated, assembled, and tested at various government and contractor office and laboratory facilities and in compliance with associated permits. Approximately thirty to ninety days before launch, the spacecraft would be transported to one of several existing Payload Processing Facilities (PPFs) at CCAFS, KSC, or VAFB where various subsystem components (pyrotechnics, batteries, instruments, etc.) would be installed and loaded. After a final test, the spacecraft would be encapsulated in a payload fairing, transported to the launch pad, and mated with the launch vehicle. Final preparation and cryogenic propellant loading of the launch vehicle would take place during a period beginning as long as 72 hours before launch. A successful launch would place the spacecraft into Earth orbit or into an

escape trajectory that would carry it into solar orbit. Routine payload spacecraft would flyby, orbit, soft land on, or impact other planetary bodies and would not return to Earth.

Figure 2.1-1 presents the process flow for a typical spacecraft from delivery at the launch site, through pre-launch processing, and to launch. While the processing requirements for a particular routine payload spacecraft may not conform exactly to Figure 2.1-1, deviations would not be substantial with respect to environmental impacts or safety concerns. Furthermore, processing would be in accordance with NASA and USAF policies and guidelines for environmental quality and worker health and safety.

Figure 2.1-1 Typical Process Flow for Routine Payload Spacecraft (L-xd = x days before launch)

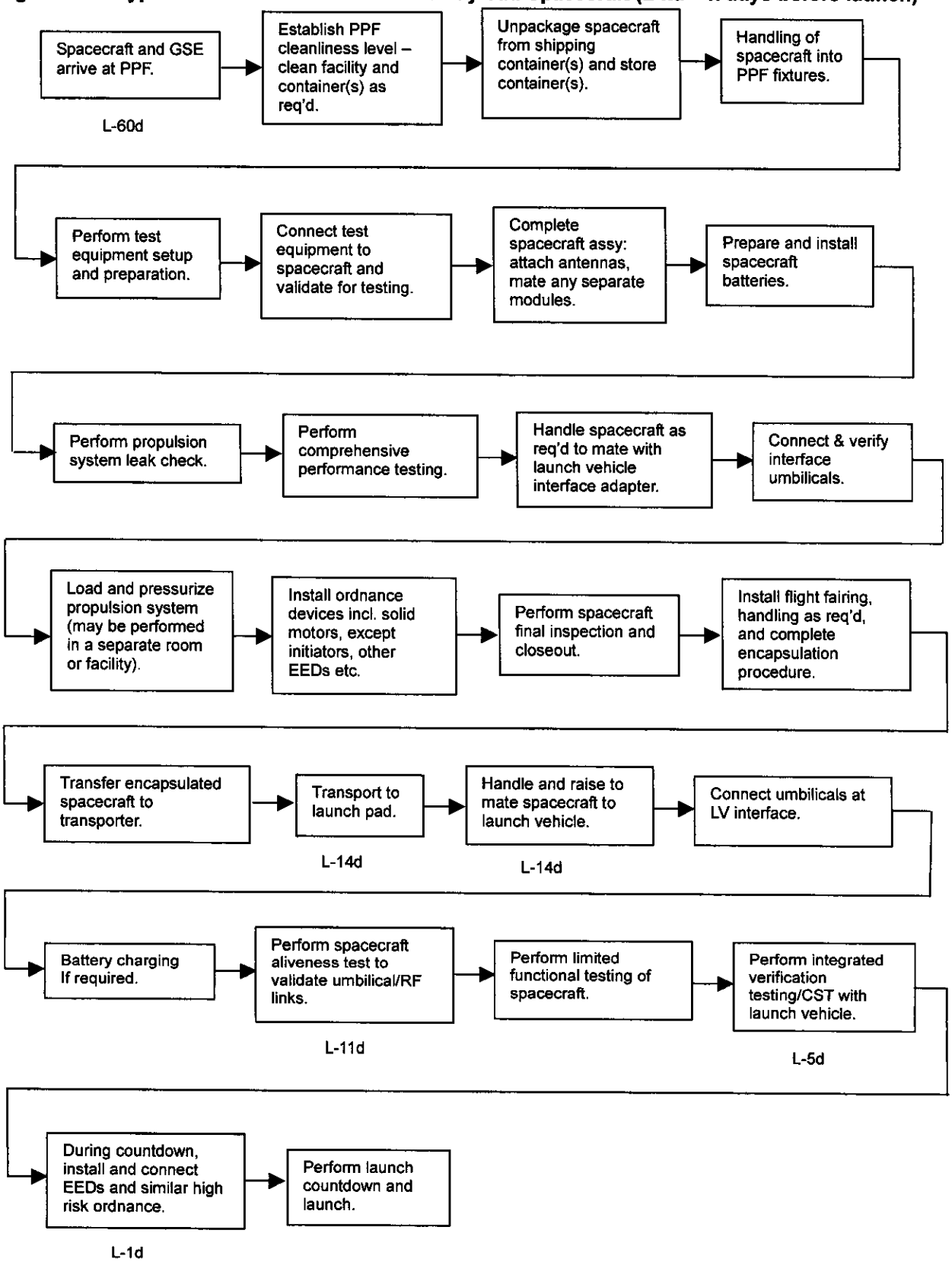

2.1.1 Representative NASA Science Missions

Three NASA space science missions, CONTOUR, MESSENGER, and Deep Impact, have completed their final stages of development and design. During the early planning stages for these missions, they were formally evaluated against the Routine Payload Checklist (Section 2.2), met all the criteria and thresholds set forth in the Routine Payload Checklist, and thus are covered by this FEA. CONTOUR, MESSENGER, and Deep Impact can be considered as representative cases of the class of NASA missions that may formally be designated as routine payload spacecraft. Brief descriptions of these missions, spacecraft, and science objectives are presented in the following paragraphs.

2.1.1.1 CONTOUR Mission Description

The goal of the COmet Nucleus TOUR (CONTOUR) mission is to send a spacecraft to flyby at least two short-period comets Encke and Schwassmann-Wachmann 3. For a period of about 10 hours during each flyby, four instruments carried by CONTOUR would image and spectrally map portions of the comet nucleus and measure the composition of gas and dust particles surrounding the comet. The 963-kg (2119-lb) CONTOUR spacecraft would be launched from CCAFS on a Delta II 2425 ELV [using four solid rocket motors (SRMs)] during a launch opportunity extending from July 01 through July 25, 2002.

The eight-sided 2.3 meter (90.6 in) diameter CONTOUR spacecraft (Figure 2.1-2) would be capable of both three-axis and spin-stabilized attitude control, entering the former mode only during brief periods of the comet flybys. Power would be provided by solar arrays covering the octagonal sides and aft end of the spacecraft. A dust shield would dominate the forward end of the spacecraft. CONTOUR would be initially launched into an elliptical Earth (phasing) orbit and would remain in Earth orbit until mid-August 2002, when a solid rocket motor burn would provide the escape velocity for the first one-year earth-return orbit. An Earth gravity-assist August 2003 would place CONTOUR into its final trajectory for its first comet encounter (Encke) in November 2003. Several Earth flybys would be used to re-target CONTOUR toward subsequent comet encounters. Table 2.1-1 presents a summary description of the CONTOUR subsystems.

CONTOUR would carry four instruments:

1) The Neutral Gas and Ion Spectrometer (NGIMS) is a quadrupole mass spectrometer that would measure the surrounding neutral gas and ion composition in-situ.
2) The CONTOUR Impact Dust Analyzer (CIDA) would measure the composition and size distribution of dust particles surrounding the comet.
3) The CONTOUR Remote Imager and Spectrograph (CRISP) would obtain multispectral maps and high-resolution images of the comet nucleus.
4) The Comet Forward Imager (CFI) would obtain medium resolution images of the comet nucleus.

Figure 2.1-2 CONTOUR Spacecraft is 2.3 m (7.5 ft) across and 1.9 m (6.2 ft) tall (excluding the antenna mast on the aft deck).

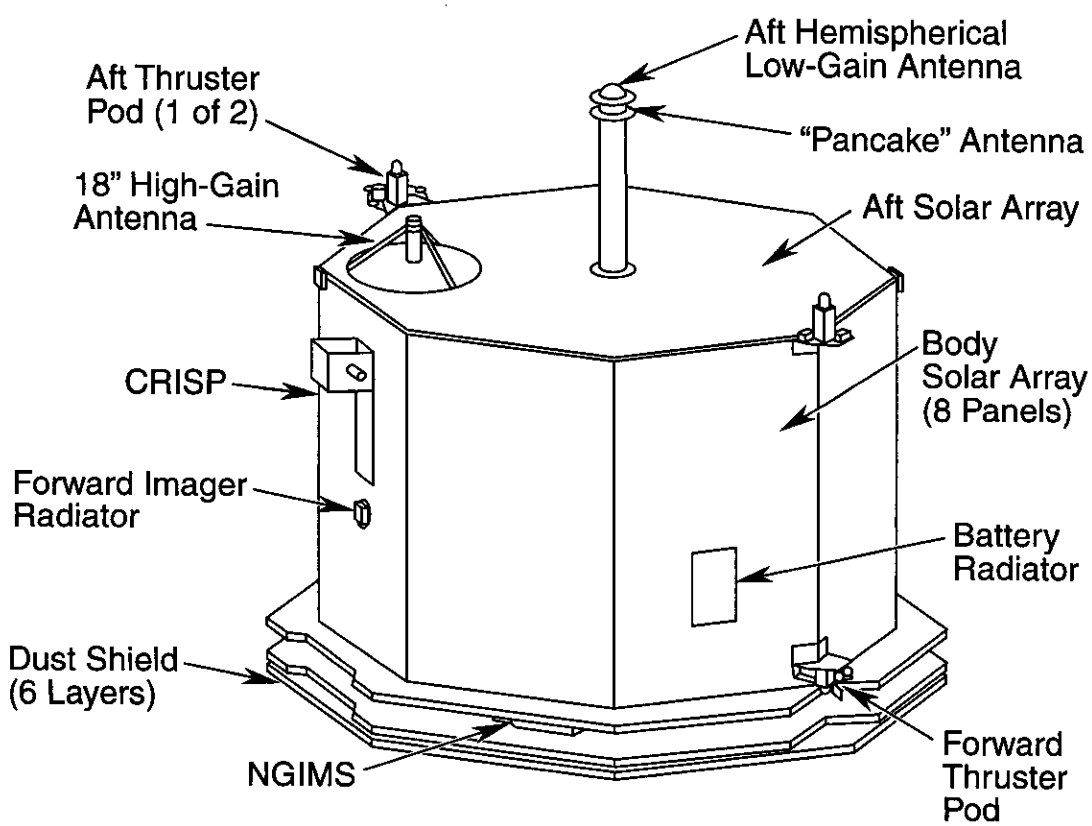

Table 2.1-1 Summary of CONTOUR Subsystems

Structural Materials	aluminum; aluminum/magnesium alloy; graphite-epoxy composites
Propulsion	monopropellant; 75 kg (165 lb) hydrazine STAR 30 SRM; 466 kg (1025 lb) AP-based solid propellant
Communications	15 W X-band transmitter
Power	GaAs solar cells, 9 A-hr NiCd battery
Science instruments	(CRISP) imager/spectrograph (CFI) Imager (NGIMS) mass spectrometer (CIDA) dust analyzer
Other	two Class C EEDs used to deploy instrument covers

EED Electro Explosive Device

2.1.1.2 MESSENGER Mission Description

The goal of the MErcury Surface Space ENvironment, GEochemistry, and Ranging (MESSENGER) mission would be to place a spacecraft into orbit around the planet Mercury in order to study its internal structure, composition, geology, atmosphere, magnetic field, and interaction with the solar wind. The 1100 kg (2420 lb) spacecraft (Figure 2.1-3) with eight scientific instruments would have a dual-mode (mono- and bipropellant) propulsion system with large fuel capacity to provide interplanetary cruise propulsion and insertion into Mercury orbit. MESSENGER would be launched from CCAFS during March 2004 on a Delta 2925H-9.5 launch vehicle directly into an interplanetary trajectory. Before reaching orbit around Mercury in April 2009 the spacecraft would make two Venus and two Mercury gravity-assist flybys during the five-year cruise. Table 2.1-2 presents a summary of MESSENGER's systems.

MESSENGER would carry out eight scientific investigations with the following instruments:

1) Mercury Dual Imaging System (MDIS), a narrow-angle imager, and wide-angle multispectral imager would map landforms, surface spectral variations, and topographic relief from stereo imaging.
2) Gamma-Ray and Neutron Spectrometer (GRNS) would measure the emissions from radioactive elements and gamma ray fluorescence stimulated by cosmic rays. GRNS has an active-shielded gamma-ray spectrometer (GRS) scintillator and a neutron spectrometer. The data would be used to map elemental abundance in crustal materials.
3) X-ray Spectrometer (XRS) would measure the fluorescence in low-energy X-rays simulated by solar gamma rays and high-energy X-rays to map elemental abundance in crustal materials.

4) Magnetometer (MAG) would determine the detailed structure and dynamics of Mercury's magnetic field and search for regions of magnetized crustal rocks.

5) Mercury Laser Altimeter (MLA), a Nd:YAG laser transmitter coupled with a receiver, would produce highly accurate measurements of topography and a measure of Mercury's libration.

6) Mercury Atmospheric and Surface Composition Spectrometer (MASCS) would measure abundance of atmospheric gases and minerals in surface materials.

7) Energetic Particle and Plasma Spectrometer (EPPS) would measure the composition, spatial distribution, energy, and variability of charged particles within and surrounding Mercury's magnetosphere. EPPS combines a Fast Imaging Plasma Spectrometer (FIPS) head and an Energetic Particle Spectrometer (EPS) head for energetic ions and electrons.

8) Radio Science (RS) experiment would use the spacecraft's radio transmitter to measure small changes in the spacecraft's velocity and so infer Mercury's internal mass distribution, including spatial differences in crustal thickness.

Figure 2.1-3 MESSENGER Spacecraft is 6.1 m (20 ft) with the solar panels extended. The MAG mast is 3.6 m (11.8 ft) tall.

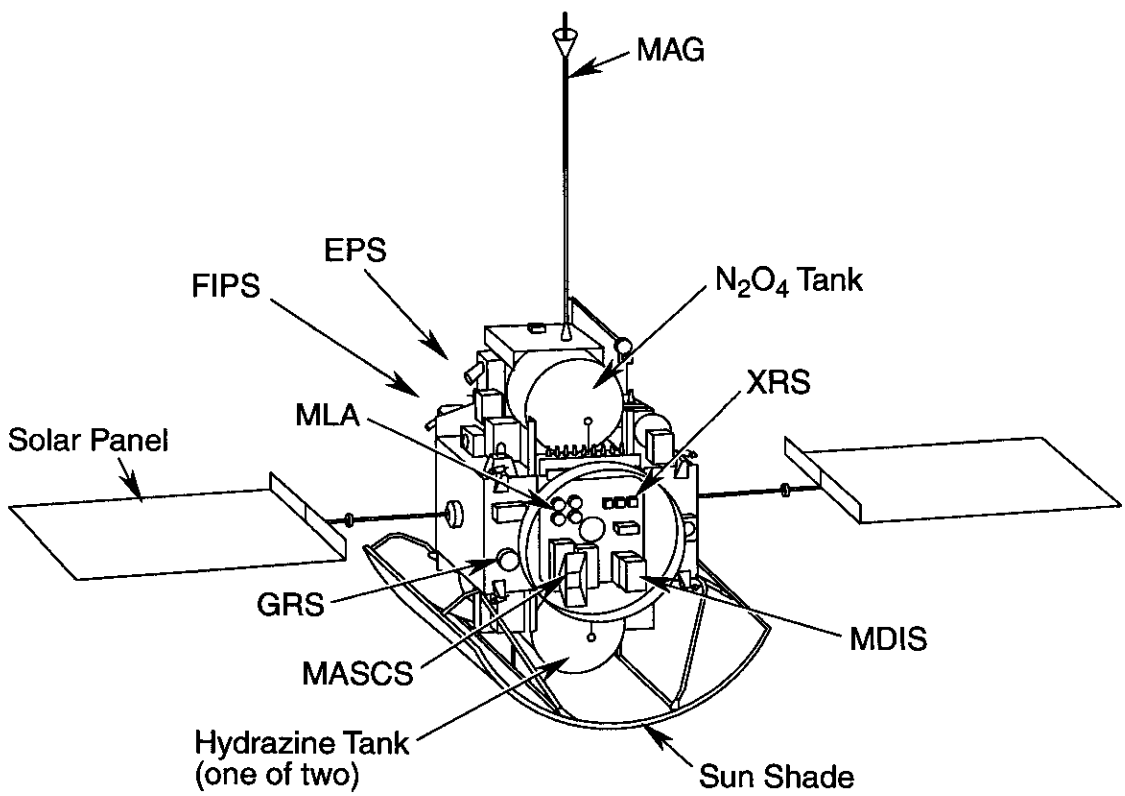

Table 2.1-2 Summary of MESSENGER Subsystems

Structural Materials	graphite-cyanate-ester composite; selected aluminum and/or magnesium alloy and/or titanium housings	
Propulsion	mono- and bipropellant; 361 kg (794 lb) hydrazine; 236 kg (519 lb) nitrogen tetroxide	
Communications	11 W X-band transmitter	
Power	solar cells, 23 A-hr Ni-H_2 battery	
Science instruments	(MDIS) Imager (MAG) magnetometer (MASCS) UV/VIS/IR spectrometer (EPPS) energetic particle and plasma detector	(GRNS) Gamma-Ray and neutron detector (XRS) X-Ray detector (MLA) laser altimeter (RS) radio science (uses spacecraft telecom system)
Other	4 kg (8.8 lb) beryllium in MLA electronics housing; Class C EEDs used to deploy solar array, MAG boom, and instrument covers	

2.1.1.3 Deep Impact Mission Description

The goal of the Deep Impact mission is to investigate the physical and chemical characteristics of the comet Temple I by excavating a large crater in the comet's surface using a high-velocity impactor. Deep Impact would be launched directly into a solar orbit resulting in an Earth flyby one year after launch with an arrival at the comet Temple I on July 4, 2005. After the completion of the encounter and associated data transmission, the flyby spacecraft would remain in solar orbit. DEEP IMPACT would be a 1010 kg (2227 lb) spacecraft (Figure 2.1-4) composed of two distinct vehicles: the main flyby spacecraft and a 350 kg (772 lb) impactor. Deep Impact would be launched from CCAFS on a Delta II 2925 launch vehicle in January 2004. Table 2.1-3 presents a summary of the Deep Impact mission's systems.

The Deep Impact impactor would consist mainly of a pure copper impact mass attached to a structure carrying an imager, avionics, battery, and S-band radio (which would relay data to the flyby spacecraft from the comet). The copper mass would provide sufficient kinetic energy to excavate a 100-meter (330 feet) crater on the comet's sunlit surface so that instruments on the flyby spacecraft could observe the interior structure and collision debris cloud.

The Deep Impact flyby spacecraft would carry the High Resolution Instrument (HRI) and Medium Resolution Instrument (MRI) to collect multi-spectral images of the comet's surface before and after the Impactor collision. Post-collision images would provide information on the composition of pristine material from the comet's interior. HRI and MRI images of the post-collision gas cloud would also provide information about the comet's composition. A High Gain Antenna (HGA) would allow transmission of the data to earth.

The Impactor spacecraft would carry the Impactor Targeting Sensor (ITS) imager. ITS is used to provide terminal guidance information for the impactor as well as provide high-resolution images of the comet nucleus before impact.

Figure 2.1-4 Deep Impact Spacecraft has a flight system that is 3.3 m (10.8 ft) long, 1.7 m (5.6 ft) wide, and 2.3 m (7.5 ft) high.

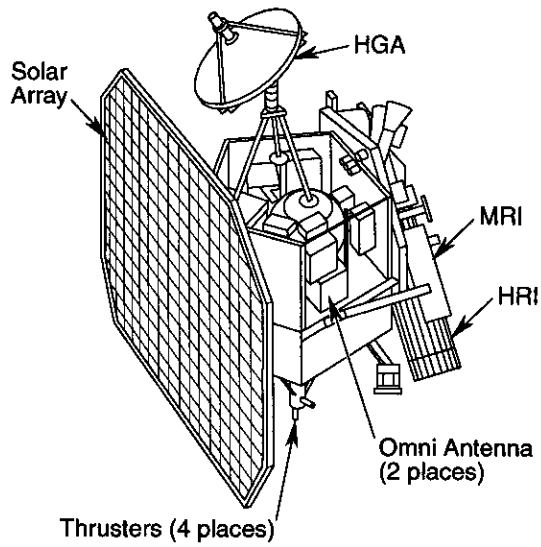

Flyby

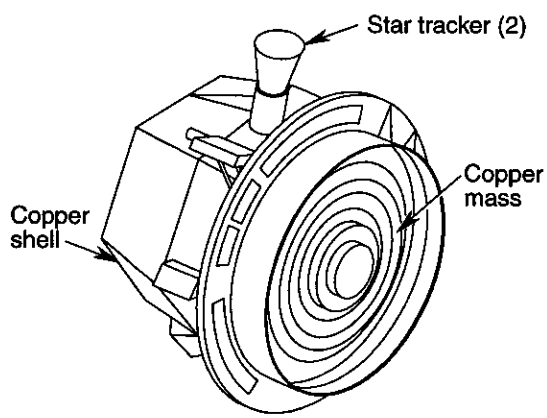

Impactor

Table 2.1-3 Summary of Deep Impact Flyby (F) and Impactor (I) Systems

Structural Materials	(F) aluminum, graphite composite (I) aluminum, copper, titanium
Propulsion	(F) monopropellant with 65 kg (143 lb) hydrazine (I) monopropellant with 7 kg (15 lb) hydrazine
Communications	(F) 12 W X-band transmitter (I) 2 W (S-band) crosslink to (F)
Power	(F) 1 kW solar array, 16 A-Hr (Ni-H_2) battery (I) 250 A-Hr (LiSOC)
Science instruments	(F) (HRI/MRI) spectral imagers (I) (ITS) imager
Other	

2.1.2 Envelope Spacecraft Description

The concept of an Envelope Spacecraft (ES) derives from the need to provide a benchmark that describes a bounding case for quantities and types of materials, emissions, and instrumentation. In addition, insofar as the pre-launch activities that are required to prepare routine payload spacecraft for launch are routine and not unusual, these activities are implicitly bounded by the ES as well. Within this context, the ES should be considered a hypothetical spacecraft whose components, materials and associated quantities, and flight systems represent a comprehensive bounding reference design for routine payload spacecraft. Any proposed spacecraft that presents lesser or equal values of environmentally hazardous materials or sources in comparison to the ES as per the Routine Payload Checklist (Section 2.2 and Appendix C) may be considered a NASA routine payload spacecraft within the purview of this FEA.

The quantitative levels noted for the ES Envelope Payload Characteristics (EPCs) were derived from a review of over 20 proposed NASA and USAF payloads tentatively scheduled for launch during the 2002-2012 period using expendable launch vehicles. Of the proposed payloads, those incorporating characteristics with unusual or high potential for substantial environmental impact were excluded. These characteristics include the use of radioisotope thermoelectric generators (RTGs) and radioisotope heater units (RHUs) as well as the equipment and operations associated with extraterrestrial sample return. Of the remaining proposed payloads, spacecraft systems with minor potential for environmental impact were identified and evaluated for:

- Solid, liquid, and electric (ion) propellant types and quantities
- Laser power levels and operating characteristics
- Explosive hazard potentials
- Battery electrolyte types and quantities

- Hazardous structural materials quantities
- Radio frequency transmitter power
- Radioisotope instrument components

A theoretical "envelope" payload was defined by the magnitudes of all of these characteristics equal to the maximum found in all the reviewed payloads, increased by 25% to reasonably allow for future growth potential.

Figure 2.1-5 illustrates the relevant features of the ES. The ES spacecraft would be launched into Earth orbit or toward another body in the Solar System. Table 2.1-4 presents the maximum quantities of materials that would be carried by the ES spacecraft and that are reflected in the Routine Payload Checklist (Section 2.2 and Appendix C). Table 2.1-4 lists the major materials associated with the ES spacecraft. Minor materials that are not listed may be included on the ES spacecraft as long as they pose no substantial hazard.

Figure 2.1-5 Envelope Spacecraft

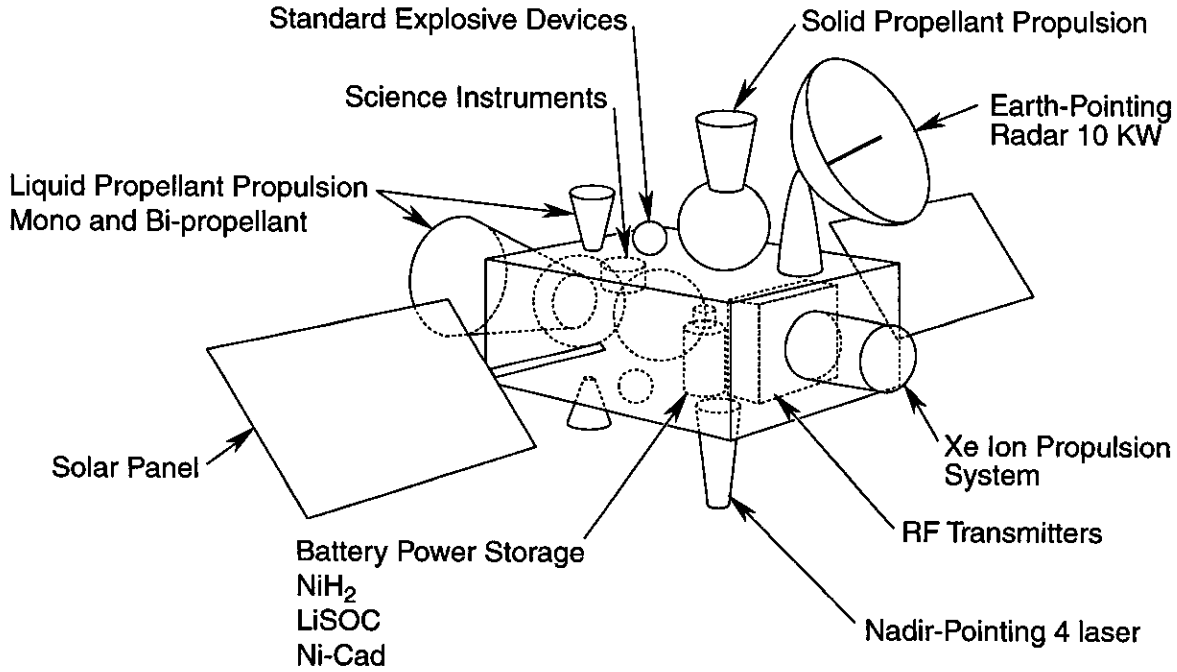

Table 2.1-4 Summary of ES Subsystems and Envelope Payload Characteristics (EPC)

Structure	**Unlimited:** aluminum, magnesium, carbon resin composites, and titanium **Limited:** beryllium [50 kg (110 lb)]
Propulsion	Mono- and bipropellant fuel; 1000 kg (2200 lb) (hydrazine); 1000 kg (2200 lb) (monomethyhydrazine) Bipropellant oxidizer; 1200 kg (2640 lb) (nitrogen tetroxide) Ion-electric fuel; 500 kg (1100 lb) (Xenon) SRM; 600 kg (1320 lb) (AP)-based solid propellant
Communications	Various 10-100 W (RF) transmitters
Power	Solar cells; 150 A-Hr (Ni-H_2) battery; 300 A-Hr (LiSOC) battery; 150 A-Hr (NiCd) battery
Science instruments	10 kW radar ANSI safe lasers (Section 4.1.2.1.3)
Other	Class C EEDs for mechanical systems deployment Radioisotopes limited to quantities that are approved for launch by NASA Nuclear Flight Safety Assurance Manager Propulsion system exhaust and inert gas venting

2.1.3 NASA Routine Payloa d Launch Vehicles

Routine payload spacecraft would be launched using one of the ELVs listed in the Routine Payload Checklist (Section 2.2 and Appendix C) that are approved for launch at CCAFS and VAFB. Individual ELVs would be carefully matched to the launch requirements of each particular spacecraft mission. Launch of routine payload spacecraft would not cause the annual number of launches from all users to exceed the rate already approved at CCAFS or VAFB for any given vehicle. These launch vehicles and associated impacts have been previously analyzed and documented under existing EAs and EISs (Appendix A)

2.1.3.1 The Atlas Launch Vehicle Family

The Atlas group of launch vehicles (Figure 2.1-6) is composed of three basic families: The Atlas II (IIA and IIAS), the Atlas III (IIIA and IIIB), and the Atlas V (400 and 500 Series).

Figure 2.1-6 Atlas Family of Launch Vehicles

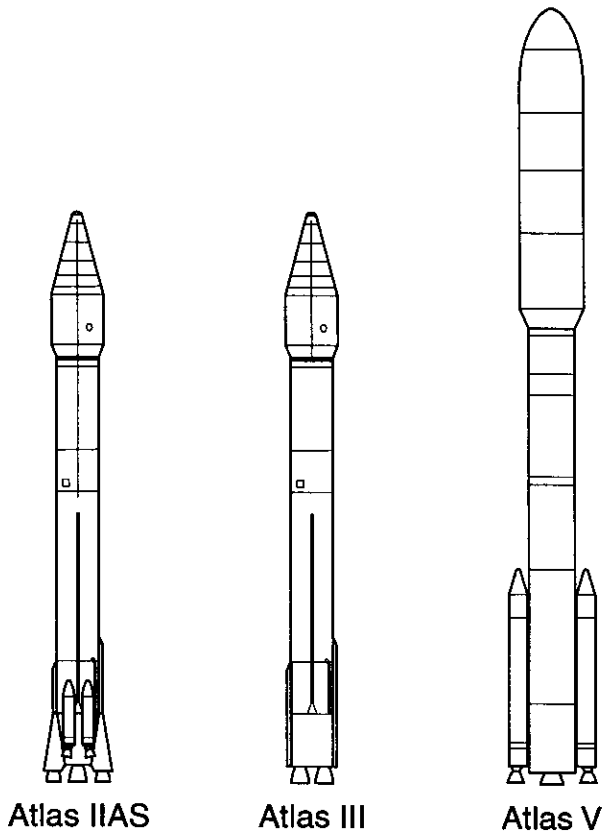

Atlas IIA and IIAS: The Atlas IIA booster uses a Rocketdyne MA-5A stage-and-one-half propulsion system with a two-chamber booster engine and sustainer engine burning a combination of liquid oxygen (LOX) and RP-1 (rocket grade kerosene) propellants. Using the total propellant capacity of 156,400 kg (344,080 lb) of liquid oxygen and RP-1 combined and the propellant ratio of 2.2:1 for oxidizer to fuel, the propellant capacity is 107,525 kg (236,555 lb) liquid oxygen and 48,875 kg (107,525 lb) RP-1. The Atlas IIAS adds four strap-on Castor IVA solid rocket motors (SRMs) to this configuration. Each Castor IVA motor contains 10,101 kg (22,222 lb) of solid propellant. Two Pratt & WHITNEY RL-10 engines that burn LOX and liquid hydrogen (LH2) power the Centaur

upper stage. Centaur propellant capacity is 16,930 kg (37,246 lb) of liquid LOX and LH_2.

In a typical launch sequence for an Atlas IIA or Atlas IIAS, the vehicle's booster and sustainer engines are ignited shortly before liftoff. For Atlas IIAS, two of the four solid rocket boosters ignite shortly before lift-off. Following burnout of the first pair, the second pair ignites and the first pair is jettisoned. Burnout and jettison of the second pair occurs two minutes into flight. Booster engine cutoff occurs about three minutes into flight and the sustainer phase continues until cutoff at about five minutes into flight. Several burns of the Centaur upper stage are used to place the payload into orbit. The Atlas II family is capable of lifting payloads ranging in weight from 2,812 to 3,719 kg (6,200 to 8,200 lb) to geosynchronous transfer orbit (GTO). Atlas IIA and Atlas IIAS are launched from LC-36 at CCAFS and SLC-3 East at VAFB.

Atlas IIIA and IIIB: The Atlas IIIA and IIIB vehicles are modified versions of the Atlas IIA. A major change is use of a new single-stage Atlas main engine, the Russian RD-180. The RD-180 engine uses liquid oxygen and RP-1. Its use eliminates use of the Atlas II stage-and-a-half design. The Atlas III design also includes lengthening of the Atlas stage to accommodate a larger propellant load (183,200 kg or 403,040 lb of liquid oxygen and RP-1). Using the total propellant capacity of 183,200 kg (403,040 lb) of liquid oxygen and RP-1 combined and the propellant ratio of 2.2:1 for oxidizer to fuel, the propellant capacity is 125,950 kg (277,090 lb) liquid oxygen and 57,250 kg (125,950 lb) RP-1. The Atlas IIIA uses a single-engine Centaur for the upper stage (16,930 kg or 37,246 lb of liquid oxygen and liquid hydrogen), while the Atlas IIIB uses a dual-engine stretched Centaur for the upper stage (20,830 kg or 45,826 lb of liquid oxygen and liquid hydrogen). The Atlas III family is capable of lifting payloads up to 4,500 kg (9,900 lb) to (GTO). The Atlas IIIA and IIIB are launched from LC-36B at CCAFS (USAF, 1991).

Atlas V: The Atlas V launch vehicle system is based on the newly developed Common Core Booster (CCB) powered by a single RD-180 engine; first flight is expected in 2003. The CCB propellant tanks hold a total of 284,089 kg (625,000 lb) of liquid oxygen and RP-l. Using the total propellant capacity of 284,089 kg (625,000 lb) of liquid oxygen and RP-1 combined and the propellant ratio of 2.2:1 for oxidizer to fuel, the propellant capacity is 195,311 kg (429,685 lb) liquid oxygen and 88,778 kg (195,311 lb) RP-1. The Atlas V 400 series uses a 4 m (13 ft) diameter payload fairing while the Atlas V 500 series uses a 5 m (16 ft) diameter payload fairing. Both the 400 and 500 series vehicles use a stretched version of the Centaur as an upper stage. The Centaur can be configured with one or two engines and holds a total of 20,672 kg (45,500 lb) of liquid oxygen and liquid hydrogen. The Atlas V 500 vehicles can also be supplemented with one to five strap-on ground- SRMs. Each contains 46,494 kg (102,300 lb) of solid propellant.

The Atlas V 400 series can lift payloads of up to 4,950 kg (10,900 lb) to GTO. Depending on the number of strap-on solid rocket motors (SSRMs) employed, the Atlas V 500 series is capable of lifting payloads from 3,970 to 8,670 kg (8,700 to 19,100 lb) to GTO. The Atlas V could be launched from LC-41 at CCAFS or SLC-3W at Vandenberg Air Force Base (ILS, 1999).

2.1.3.2 DELTA Family of Launch Vehicles

The Delta family (Figure 2.1-7) consists of the Delta II, III, and IV.

Figure 2.1-7 Delta Family of Launch Vehicles

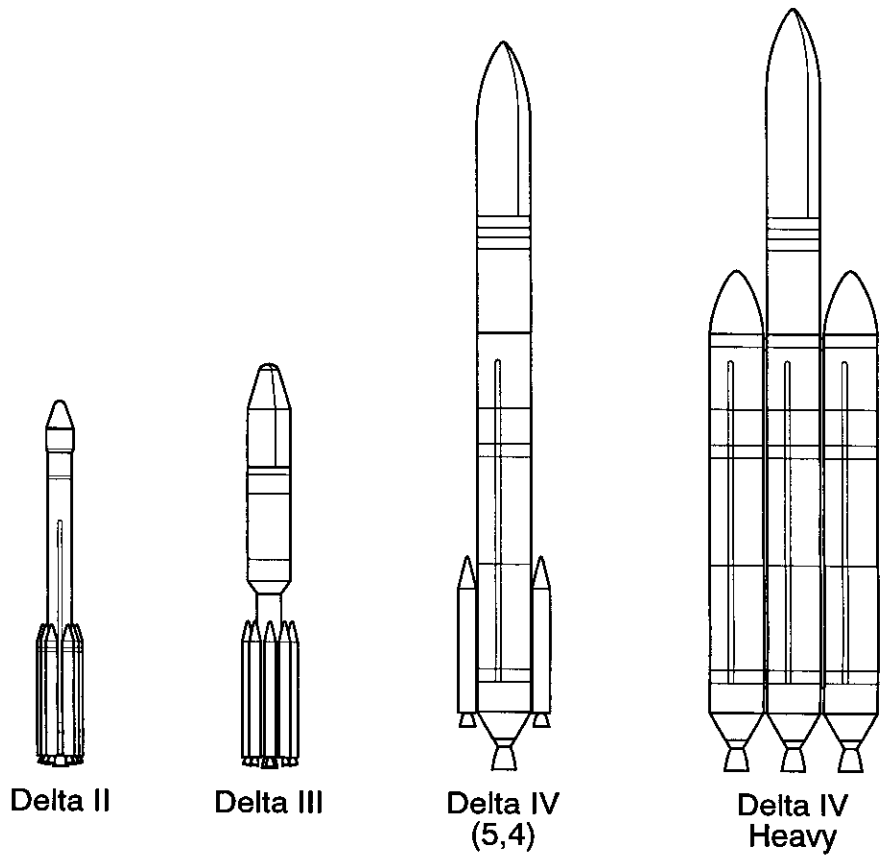

Delta II: The Delta II is a two- or three-stage launch vehicle with strap-on solid rocket motors (SSRMs). The Delta II may be flown in several configurations with variable numbers and types of SRMs including the designations 2326, 2425, 2925, 2426 and 2925-Heavy. The first stage is powered by the following: a Boeing Rocketdyne-built RS-27A main engine, two Rocketdyne vernier engines (roll and attitude control), and by optional Alliant Techsystems' solid rocket strap-on graphite-epoxy motors (GEMs) (added boost during liftoff). The propellant load for the first stage consists of 66,000 kg (145,000 lb) of liquid oxygen and 29,900 kg (65,700 lb) of RP-1. Thrust is augmented by up to nine

1.02-m (40-in) diameter SRMs or nine 1.17-m (46-in) diameter SRMs (of the type used on the Delta III). The solid propellant weight in each 1.0-m diameter GEM is 11,765 kg (25,937 lb). When nine GEMs are used, six GEMs are ignited at launch, and the remaining three GEMs are air-lit after burnout of the first six. Other versions of the Delta II use four or three ground-lit SRMs. The Delta II second stage has an Aerojet AJ10-118K engine that uses 2,064 kg (4,540 lb) of Aerozine-50 as fuel and 3,922 kg (8,630 lb) of nitrogen tetroxide as oxidizer. The Delta II third stage consists of a Thiokol Star-48B solid rocket motor and is used on some Delta II configurations. Thiokol Corporation produced this motor, and it contains 2,009 kg (4,420 lb) of solid propellant.

The Delta II is launched from LC-17 at CCAFS and from SLC-2 at VAFB. It provides a payload capacity of over 1,869 kg (4,110 lb) to GTO (BOEING, 1996).

Delta III: The Delta III is a two- or three-stage launch vehicle that uses nine 1.17-m (46-in) diameter SSRMs. The first stage includes a Rocketdyne RS-27A main engine, two Rocketdyne vernier engines (roll and attitude control), and nine 1.17-m (46-in) diameter Alliant Techsystems GEM-46 SSRMs. The first stage is powered by 66,400 kg (146,000 lb) of liquid oxygen and 30,000 kg (66,000 lb) of RP-1. The first stage is jettisoned at an altitude of approximately 80 nautical miles and burns up during re-entry. The solid propellant weight in each 1.17-m GEM is 16770 kg (36,900 lb). Six motors are ignited at lift-off and the remaining three motors are ignited in flight after burnout of the first six. All of the solid rocket motors are jettisoned during flight and land in the ocean. The second stage is an upgraded cryogenic Centaur powered by a Pratt & Whitney RL10B2 restartable engine. Stage 2 contains 2545 kg (5,600 lb) of LH_2 and 14,227 kg (31,300 lb) of liquid oxygen (LOX). A hydrazine-fueled attitude control system provides roll and pitch/yaw control during flight. Depending upon mission needs, a third stage is employed to increase capability. The optional third stage consists of a STAR 48B solid rocket motor produced by Thiokol Corporation. This motor contains 2,009 kg (4,420 lb) of solid propellant.

The Delta III is launched from LC-17B at CCAFS. The Delta III is capable of delivering an 8,181-kg (18,000-lb) payload to Low Earth Orbit (LEO) and a 3818-kg (8,400-lb) payload to GTO (USAF, 1996b).

Delta IV: The Delta IV family is planned as a suite of five two-stage launch vehicles designed to launch medium to heavy payloads. The first Delta IV launch is expected in 2002. The five vehicles are the Delta IV Medium (Delta IV-M), three versions of the Delta IV Medium-Plus (Delta IV-M+), and the Delta IV Heavy (Delta IV-H). All five are based on a common booster core (CBC) first stage that uses a Rocketdyne RS-68 engine powered by liquid hydrogen and liquid oxygen. Using a total propellant mass of 199,600 kg (439,120 lb) and a ratio of 6:1 ratio for LOX to LH_2, the CBC first stage would use 28,500 kg (62,700 lb) of LH_2 and 171,000 kg (376,000 lb) of LOX. There are two second-stage configurations. The first configuration is a 4-m version [11,225 kg (24,750 lb) total propellant with a 6:1 ratio for LOX to LH_2] that is used on the Delta IV-M

as well as the Delta IV-M+(4,2). The second configuration is a 5-m version [27,200 kg (60,000 lb) total propellant with a 6:1 ratio for LOX to LH_2] that is used on the Delta IV-M+ (5,2) as well as the Delta IV-H. Both second-stage configurations use the Delta III cryogenic Pratt & Whitney RL10B-2 engine. The Delta IV Medium is built around the CBC first stage and includes the baseline second stage derived from the 4-m (157.5-in) diameter Delta III, but with stretched fuel and oxidizer tanks for increased performance. It could lift up to 4,220 kg (9,285 lb) to GTO. The three versions of the Medium-Plus use the CBC and are augmented by either two or four solid rocket strap-on graphite-epoxy-motors (GEMs). The largest version with four strap-on motors could lift 6,580 kg (14,475 lb) to GTO. The Delta IV Heavy joins together three CBCs and uses the larger Medium-Plus second stage engine and propellant tanks. It is designed to lift 13,160 kg (28,950 lb) to GTO. The Delta IV family would be launched from LC-37 at CCAFS and from SLC-6 at VAFB (BOEING, 1999).

2.1.3.3 TAURUS Launch Vehicle

The Taurus launch vehicle (Figure 2.1-8) is powered by four solid propellant stages. Stage 0 utilizes a Thiokol Castor-120 motor. The Taurus upper stages (Stages 1, 2, and 3) are the Alliant Orion 50S, 50, and 38 motors, respectively. These motors were originally developed for the Pegasus launch vehicle and have been adapted for use on the Taurus. All four motors are loaded with solid propellant. Solid propellant quantities per stage are 50,000 kg (110,000 lb) for Stage 0, 12,152 kg (26,734 lb) for Stage 1, 3,029 kg (6,664 lb) for Stage 2, and 777 kg (1,710 lb) for Stage 3.

Taurus is launched from Facility 576E on north Vandenberg Air Force Base. This launch facility is a decommissioned Atlas F launch facility that was modified for Taurus launches. Taurus can deliver satellites of up to 1,364 kg (3,000 lb) into LEO and payloads up to 409 kg (900 lb) into GTO (ORBITAL, 1992).

2.1.3.4 ATHENA Launch Vehicle

The Athena launch vehicle family (Figure 2.1-8) consists of the Athena I and Athena II. Both are based on rocket boosters fueled by solid propellant. Athena I consists of a Castor-120 first stage and an Orbus 21D second stage. Athena II is larger and consists of a Castor-120 first stage, a Castor-120 second stage, and an Orbus 21D third stage. The Castor-120 and Orbus 21D booster use solid propellant. The Castor-120 contains 49,000 kg (108,000 lb) of solid propellant and the Orbus 21D has 10,000 kg (22,000 lb) of solid propellant. The Athena's attitude control system (ACS) uses hydrazine (N_2H_4) monopropellant as fuel for the thrusters. The hydrazine is passed over a catalytic bed that results in production of ammonia, nitrogen, and hydrogen gas. The ACS contains up to 354 kg (780 lb) of hydrazine.

The Athena family of vehicles is launched from the California Spaceport at VAFB and from LC-46 at CCAFS. The payload capacity to LEO is 1,065 kg (2,343 lb) for the Athena I and 2,410 kg (5,320 lb) for the Athena II. (USAF, 1994)

2.1.3.5 PEGASUS XL Air-Launched Vehicle

The Pegasus XL (Figure 2.1-8) is a winged, three-stage, solid rocket booster that measures 16.9 m (55.4 ft) in length and has a wingspan of 6.7-m (22-ft). The Orbital Carrier Aircraft (L-1011) lifts the Pegasus XL to a level flight condition of about 11,900 m (39,000 ft) and Mach 0.80. The Stage 1 motor ignition occurs about five seconds after release from the aircraft. This Stage 1 motor (Orion 50S XL) contains 15,048 kg (33,105 lb) of solid propellant. The Stage 2 motor (Orion 50 XL) contains 3,934 kg (8,655 lb) of solid propellant, and the Stage 3 motor (Orion 38) contains 770 kg (1,697 lb) of solid propellant. Pegasus also has the option for a liquid propellant fourth stage for increasing payload injection accuracy and payload capacity. This Hydrazine Auxiliary Propulsion System (HAPS) contains approximately 59 kg (130 lb) of hydrazine propellant.

The primary integration site for Pegasus is at Orbital's Vehicle Assembly Building at VAFB. Payloads are received, processed, and mated with Pegasus at this facility. The integrated Pegasus is then transported to the VAFB airfield and mated with the L-1011 aircraft. The Pegasus is typically launched from the L-1011 in the Western Range off the California coastline. Alternatively, it can be launched from locations in the Eastern Range. Launches from the Eastern Range would usually be supported by payload integration at VAFB. (ORBITAL, 2000).

2.1.3.6 TITAN II Launch Vehicle

The Titan II space launch vehicle (Figure 2.1-8) is a two-stage liquid-fueled booster developed from the refurbishment of decommissioned Titan II Intercontinental Ballistic Missiles (ICBMs). The Titan II uses Aerozine-50 (A-50) as the liquid fuel and nitrogen tetroxide (NTO) as the liquid oxidizer. A-50 is a 50/50 blend of hydrazine and unsymmetrical-dimethylhydrazine (UDMH). Stage 1 is powered by a LR87 liquid engine and contains 40,885 kg (89,947 lb) of A-50 and 77,279 kg (170,015 lb) of NTO. Stage 2 is powered by a LR-91 liquid engine and contains 9781 kg (21,519 lb) of A-50 and 17176 kg (37,787 lb) of NTO. The attitude control system contains about 41 kg (90 lb) of hydrazine.

The Titan II is launched only from SLC-4W at VAFB. It is classified as a small to medium weight class vehicle. It can lift approximately 1,909 kg (4,200 lb) into a polar LEO. (TITAN II 1987)

Figure 2.1-8 Athena II, Taurus, Titan II, and Pegasus Launch Vehicles

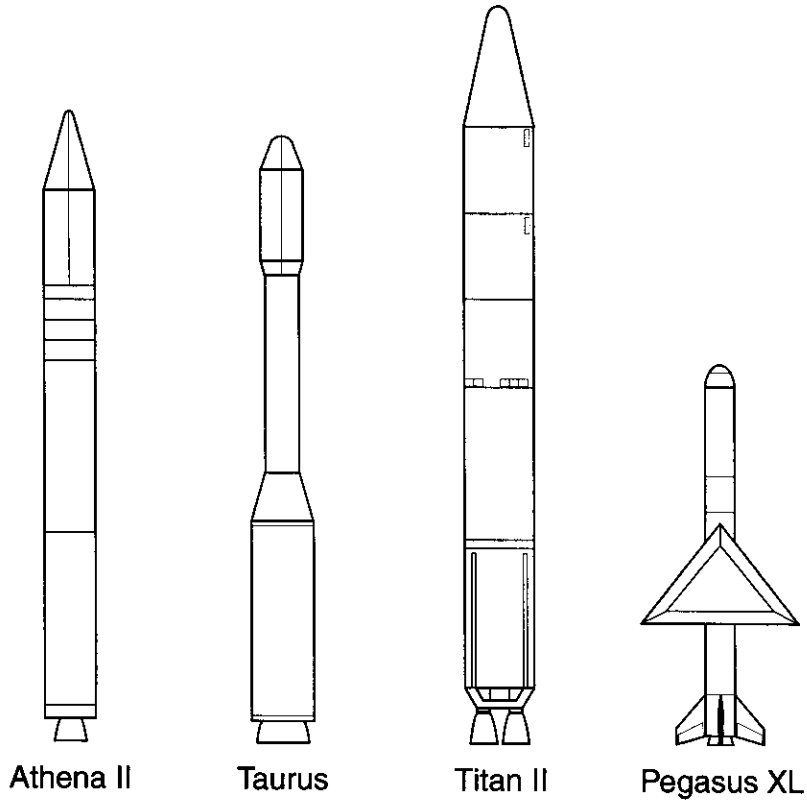

2.1.4 Space Launch Complexes

Routine payload spacecraft would be launched only from existing space launch complexes (SLCs) at VAFB or launch complexes (LCs) at CCAFS that support the ELVs chosen for routine payload launches.

2.1.4.1 Launch Complexes – CCAFS

LC-17 – Space Launch Complex 17 (LC-17) is located in the southeastern section of CCAFS. It consists of two launch pads (17A and 17B), a blockhouse, ready room, shops, and other facilities necessary to prepare, service, and launch the Delta II and Delta III vehicles. Delta II is launched from Pad 17A and Delta III is launched from Pad 17B.

LC-36 - Space Launch Complex 36 (LC-36) is located near the tip of Cape Canaveral. Pad A is located at the north end of the complex and Pad B is located at the south end. LC-36B is configured for launching the Atlas II and Atlas III vehicles and is the dedicated launch facility for commercial Atlas launches. The major facilities supporting spacecraft interfaces at LC-36 are the two launch pads, their mobile service towers, and the blockhouse. A variety of other buildings and systems at the launch complex support these facilities. (ILS, 1999)

LC-37 - Space Launch Complex 37 (LC-37) is located in the northeastern section of CCAFS between LC-36 and LC-41. It consists of one launch pad (Pad B), a mobile service tower, a common support building, a support equipment building, ready room, shops, and other facilities needed to prepare, service, and launch the Delta IV vehicles. The pad can launch any of the five Delta IV vehicle configurations. (BOEING, 1999)

LC-41 - Space Launch Complex 41(LC-41) is located on the northern end of CCAFS. Formerly used to launch Titan IV vehicles, it is now being reconfigured to support launches of Atlas V.

LC-46 - Launch Complex 46 (LC-46) is a commercial launch pad located at the eastern tip of CCAFS near LC-36. The Florida Spaceport Authority converted it in 1997 to support orbital launch systems including Athena and Taurus.

2.1.4.2 Space Launch Complexes at VAFB

SLC-2 – Space Launch Complex 2 (SLC-2) is located on north VAFB. It consists of one launch pad, a blockhouse, a Delta operations building, shops, a supply building, and other facilities necessary to prepare, service, and Launch the Delta II vehicle. SLC-2 is also known as SLC-2W, which is the only active pad at this complex.

SLC-3 - Space Launch Complex 3 (SLC-3) is located on south VAFB. It consists of two launch pads: SLC-3 East and SLC-3 West. SLC-3 East was upgraded in 1996 to support launches of Atlas IIA and Atlas IIAS. Major facilities at SLC-3 East include the mobile service tower, the launch support building, the umbilical tower, and a launch operations building. The Atlas launch control center has been relocated from the existing SLC-3 blockhouse to a remote location on north VAFB. SLC-3 West would be reconfigured to support Atlas V launches.

SLC-4 - Space Launch Complex 4 (SLC-4) is located on south VAFB. It consists of two launch pads. SLC-4 West is configured to launch the Titan II and SLC-4 East is configured to launch the Titan IVB.

SLC-6 – Space Launch Complex 6 (SLC-6) is located on south VAFB near Point Arguello. It consists of one launch pad, the Delta Operations Center, an integrated processing facility, a support equipment building, a horizontal integration facility, and other facilities necessary to prepare, service, and launch the Delta IV launch vehicles.

California Spaceport (SLC-7) - The California Spaceport is located on south VAFB immediately south of SLC-6. It is a commercial launch site leased from the USAF and is designed to launch small vehicles such as Athena. The launch facility includes an exhaust duct with steel frame and a launch ring. There is also a support equipment building, a launch equipment vault, a mobile scaffold tower, a launch control room (SLC-6), and a large item storage facility.

SLC 576E - Complex 576E is located on north VAFB and is the primary launch facility for the Taurus launch vehicle at VAFB. The facility was formerly used for launching Atlas ICBMs. It is relatively austere with few permanent structures. It consists of a launch pad, lighting towers, and camera towers. Launch support equipment is installed at the launch pad prior to launch. This equipment includes a launch stand, scaffolding, and an integration tent.

2.1.5 Payload Processing Facilities

Routine payload spacecraft would be prepared for launch using only existing facilities at CCAFS, KSC, or VAFB.

2.1.5.1 Payload Processing Facilities at CCAFS Area

Vertical Processing Facility (VPF) – The VPF is used to integrate vertically processed payloads. It is located in the Hypergol/Payload Test Area in the KSC Industrial Area. The high bay contains two payload workstands. The VPF is capable of conducting hazardous processing using monopropellants.

Multi-Payload Processing Facility (MPPF) – The MPPF is located in the KSC Industrial area. It is designed for non-hazardous processing activities. The MPPF consists of an airlock and processing highbay and lowbay.

Spacecraft Assembly and Encapsulation Facility Number 2 (SAEF-2) – The SAEF-2 facility is located in the Hypergol Maintenance Facility Area of the KSC Industrial Area. It is used for the assembly, test, encapsulation, ordnance work, propellant loading, and pressurization of spacecraft.

Payload Hazardous Servicing Facility (PHSF) – The PHSF is a NASA facility located southeast of the KSC Industrial Area near the SAEF-2 facility. It is designed to accommodate both hazardous and non-hazardous payload processing. Hazardous operations include ordnance installation, loading of liquid propellants, hazardous systems tests, mating of a payload to a solid propellant upper-stage motor, and propellant leak tests.

Defense Secure Communication Satellite (DSCS) Processing Facility (DPF) – The DPF is an USAF facility that accommodates both hazardous and non-hazardous payload processing and encapsulation activities. It is located near the skid strip on CCAFS. It was designed to service a DSCS III class payload consisting of the payload and integrated apogee boost subsystem. The facility can accommodate propellant loads of 9,000 kg (19,800 lb) of liquid bipropellant and/or 9,000 kg (19,800 lb) of solid-propellant motors.

Spacecraft Processing and Integration Facility (SPIF) - The SPIF is an USAF facility designed for hazardous and non-hazardous payload processing and encapsulation. It is located in the Solid Motor Assembly Building (SMAB) on CCAFS near LC-40 and LC-41. It can support loading of liquid fuels and oxidizers, as well as integration of payloads with solid-propellant motors.

2.1.5.2 Payload Processing Facilities at VAFB

Astrotech Payload Processing Facility (Building 1032) – The Astrotech facility is located on north VAFB along Tangier Road. It is approximately 3.2 kilometers (2 miles) southeast of the Delta II launch complex (SLC-2). Building 1032 houses two explosion-proof high bays and an explosion-proof air lock/high bay for non-hazardous and hazardous operations. This building is used for final assembly and checkout of the spacecraft, liquid propellant, and solid rocket motor handling operations, third-stage preparations, and payload final assembly.

NASA Hazardous Processing Facility (Building 1610) – Building 1610 is located on north VAFB along Tangier Road. It is approximately 3.2 kilometers (2 miles) southeast of SLC-2. This facility provides capabilities for spacecraft balancing and can be used for fairing processing, solid-motor build-up, spacecraft build-up, ordnance installation, and loading of hazardous propellants.

California Spaceport Integrated Processing Facility – The Integrated Processing Facility is located at SLC-6 on south VAFB. The facility provides hazardous payload processing and has six major processing areas: airlock, high bay, three payload checkout cells, transfer tower area, fairing storage and assembly area, and seven payload processing rooms. The processing rooms can be used for small payload processing or processing support. The transfer tower area is used to encapsulate processed payloads inside the payload fairing.

2.2 NASA ROUTINE PAYLOAD CHECKLIST

For a mission to be covered by this NASA routine payload Final Environmental Assessment (FEA), the spacecraft, as well as the associated launch vehicle, must meet specific limiting criteria. In addition to determining whether the launch and processing facilities are among those listed in sections 2.1.4 and section 2.1.5, coverage under this FEA is determined by evaluating a series of questions that serve as a Routine Payload Checklist (RPC). The RPC should be evaluated following the format in Appendix C as soon as the proposed spacecraft subsystems are sufficiently well defined (i.e., Phase B).

If responses to all checklist questions were negative, the candidate mission would be considered covered by this FEA. If answers to any of the checklist questions were positive, further NEPA documentation would be required. The nature and scope of the environmental review process, analysis, and documentation required would be determined in consultation with NASA Headquarters.

When evaluating the criteria questions against a candidate mission, the Envelope Payload Characteristics (EPCs) presented in the routine payload spacecraft Envelope Payload (EP) (Table 2.1-4 and Appendix C) would be compared against the associated candidate mission characteristics. The EPCs represent upper limits to specific material quantities, power, or exposures. Proposed spacecraft that present lesser or equal quantities than the limits documented for the ES may be considered a NASA routine payload spacecraft within the purview of this FEA.

1. Would the candidate mission return a sample from an extraterrestrial body?

Spacecraft that would return air, soil, or other materials from any extraterrestrial body or from interplanetary space are not covered by this FEA. This includes spacecraft that would return a sample to the Earth's surface and spacecraft that would return a sample only to Earth orbit.

2. Would the candidate spacecraft carry radioactive sources such that launch could not be approved by the NASA Office of Safety and Mission Assurance (OSMA) Nuclear Flight Safety Assurance Manager (NFSAM) as per NPG 8715.3 (NASA Safety Manual)?

Spacecraft carrying any radioactive material for power, heat sources, instrument calibration, structural members, or any other purpose must be analyzed and reviewed for launch approval with the level of analysis and approval determined by the quantity of radioactive material. The NASA NFSAM may approve launch for small quantities of radioactive material that have been shown to present no substantial public hazard. Spacecraft that would carry radioactive sources that

require launch approval at the OSMA Associate Administrator level or above are not covered by this FEA and would require further NEPA analysis.

3. Would the candidate spacecraft be launched on a vehicle and pad combination other than those listed in Table 2.2-1?

The group of launch vehicles selected for routine payload spacecraft has been approved for launch from the launch complexes cited. The environmental impacts of these vehicles have been reported in previous NEPA documentation.

Table 2.2-1 Launch Vehicles and Launch Pads

Launch Vehicle	Eastern Range (CCAFS Launch Complexes)	Western Range (VAFB Space Launch Complexes)
Atlas IIA & AS	LC-36	SLC-3
Atlas IIIA & B	LC-36	SLC-3
Atlas V Family	LC-41	SLC-3
Delta II Family	LC-17	SLC-2
Delta III	LC-17	N/A
Delta IV Family	LC-37	SLC-6
Athena I & II	LC-46 or -20	California Spaceport
Taurus	LC-46 0r -20	SLC-576E
Titan II	N/A	SLC-4W
Pegasus XL	CCAFS skidstrip KSC SLF	VAFB airfield

4. Would the proposed mission launch(es) cause the manifested launch rate (per year) for a particular launch vehicle to exceed the launch rate previously approved and permitted at CCAFS and VAFB?

NEPA documentation for each potential routine payload launch vehicle has been approved assuming a particular number of annual launches from CCAFS or VAFB. If adding the launch(es) required by the proposed spacecraft to the existing launch manifest would cause the number of launches to exceed the approved annual number for any year, further NEPA analysis would be required. Consult with the launch support organizations 30th Space Wing (30SW/CES) and 45th Space Wing (45SW/CES) at VAFB and CCAFS, respectively.

5. Would the candidate mission require the construction of any new facilities or substantial modification of existing facilities?

Routine payload spacecraft would use only existing launch site facilities including roads, utilities, payload and launch vehicle processing facilities, and

launch complexes. Minor modifications to existing facilities required for launch of the proposed spacecraft would be covered by this FEA only if the associated activities remain within the scope of permitted operations at CCAFS or VAFB. Any non-covered modification or new construction would require further NEPA analysis.

6. Would the candidate spacecraft utilize any hazardous propellants, batteries, ordnance, radio frequency transmitter power, or other subsystem components in quantities or levels exceeding the EPC? (Table 2.1-4)

The routine payload Envelope Spacecraft defines the maximum allowable quantities and levels of commonly used materials and systems that routine payload spacecraft could carry. These values are presented in Table 2.1-4.

7. Would the candidate spacecraft utilize any potentially hazardous material as part of a flight system whose type or amount precludes acquisition of the necessary permits prior to its use or is not included within definition of the ES?

Routine payload spacecraft could carry small quantities of hazardous materials that are not included as part of the ES description. If so, the required local permit(s) must be identified (if currently in force) or obtained (if new or renewed) before the material is used at the launch site.

8. Would the candidate spacecraft release material other than propulsion system exhaust or inert gases into the atmosphere?

Routine payload spacecraft would not release or vent any material into the atmosphere that could present a hazard or substantial environmental impact either during launch preparations or launch.

9. Would launch of the candidate spacecraft suggest the potential for any substantial impact on public health and safety not covered by Chapter 4 of this FEA?

The environmental impact of routine payload spacecraft is bounded by the potential impact of preparation and launch of Envelope Spacecraft as presented in Chapter 4 of this FEA. Changes in preparation, launch, or operation from standard practices described in Chapter 3 would require review to determine if the changes or associated environmental impacts are substantial enough to require further NEPA review.

10. Would the candidate spacecraft have the potential for substantial effects on the environment outside the United States or on the global commons?

If the launch or operation of the candidate spacecraft in the course of normal or anomalous operations might cause substantial effects outside of the United States, further analysis must be performed according to Executive Order 12114.

11. Would the candidate spacecraft utilize an Earth-pointing laser system that does not meet the requirements for safe operations according to the analysis techniques in ANSI Z136.1-2000 and ANSI Z136.6-2000?

Routine payload spacecraft could carry Earth-pointing laser systems as part of scientific instrumentation. Routine payload laser systems must meet performance criteria that eliminate the potential for the laser energy to present a health hazard for persons on the ground or in aircraft. Laser systems that would operate only in interplanetary space or in orbit around other planets are not required to meet the eye-safe requirement if they have systems that would prevent use when pointing toward the Earth. Section 4.1.2.1.3 documents not only the laser safety standards but also the required notifications and permits that must be obtained prior to use of Earth-pointing laser systems.

12. Would the candidate spacecraft contain pathogenic microorganisms (including bacteria, protozoa, and viruses) that could produce disease or toxins hazardous to human health?

Spacecraft that would carry live or inactive disease-causing biological agents as part of an experiment package are not covered by this FEA.

13. Would launch and operation of the candidate spacecraft have the potential to create substantial public controversy related to environmental issues?

Based on prior NASA experience and associated review, routine payload spacecraft are considered routine in that they would not present any environmental impacts that are new or unusual and would not raise or create substantial public controversy related to environmental concerns.

2.3 ALTERNATIVES TO THE PROPOSED ACTION

The scope of this FEA includes all spacecraft that would meet specific criteria on their design and launch, would accomplish the requirements of NASA's research objectives, and would not present new or substantial environmental impacts or hazards. These spacecraft would meet the limitations set forth in the Routine Payload Checklist (RPC), which was developed to delimit the characteristics and environmental impacts of this group of spacecraft. Preparation and launch of all spacecraft that are members of the class of routine payloads would not have substantial environmental impact. Alternative spacecraft designs that exceed the limitations of the RPC may have new or substantial environmental impacts or hazards and are not covered by this FEA.

The nature of environmental impacts, payload processing, launch sites, and other related information for foreign launch systems is generally not as well known or as well documented as for launches from the U. S. In addition, NASA Policy Directive (NPD 8610.7) requires that the launch of U.S. Government-sponsored spacecraft utilize all reasonable sources of U.S. launch services. Utilization of a non-U.S. vehicle requires a waiver from the Office of Science and Technology Policy, or the no-cost provision of the non-U.S. vehicle as part of an international cooperative mission. Additional review and documentation would be required for the use of non-U.S. launch vehicles. Therefore, for the purpose of this routine payload spacecraft FEA, foreign launch vehicles were not considered to be reasonable alternatives.

2.4 NO ACTION

The No-Action alternative would mean that the NASA would not launch scientific spacecraft missions defined as routine payloads using specific criteria and thresholds. NASA would then propose spacecraft missions for individualized review under the National Environmental Policy Act (NEPA). Duplicate analyses and redundant documentation would not present any new information or identify any substantially different environmental impacts.

(THIS PAGE INTENTIONALLY LEFT BLANK)

3 CHAPTER THREE – AFFECTED ENVIRONMENT

3.1 INTRODUCTION

This chapter describes the existing environment in and around Cape Canaveral Air Force Station (CCAFS) and Kennedy Space Center (KSC), Florida, as well as Vandenberg Air Force Base (VAFB), California. This information serves as a baseline from which to identify and evaluate environmental changes resulting from activities associated with the proposed launching of spacecraft that have been determined to be NASA routine payloads. The greater part of the information contained in this chapter is extracted from three existing documents: a) the Evolved Expendable Launch Vehicle (EELV) Environmental Impact Statement, b) the EELV Supplemental Environmental Impact Statement, and c) the KSC Environmental Resources Document. The reader is referred to these documents for additional information regarding the existing environmental settings at CCAFS, KSC, and VAFB.

3.2 COMMUNITY SETTING

3.2.1 CCAFS and KSC

CCAFS and the KSC are situated on the Cape Canaveral and northern Merritt Island along the east-central Atlantic Coast in Brevard County, Florida. Cities and towns within Brevard County include Cape Canaveral, Titusville, Cocoa, Melbourne, West Melbourne, Palm Bay, Palm Shores, Cocoa Beach, Indialantic, Indian Harbor Beach, Malabar, Satellite Beach, and Rockledge. The total population of Brevard County increased from 398,978 in 1990 to 476,230 in 2000, which was a 19.4% increase. For comparison, a population forecast prepared by the U.S. Bureau of the Census projected the number of persons in Brevard County to increase at an average annual rate of 2.2 percent between 1994 and 2000 (USAF, 1998). The CCAFS and KSC area is shown in Figure 3.2-1.

Figure 3.2-1 Regional Map of CCAFS and KSC (NASA, 1998)

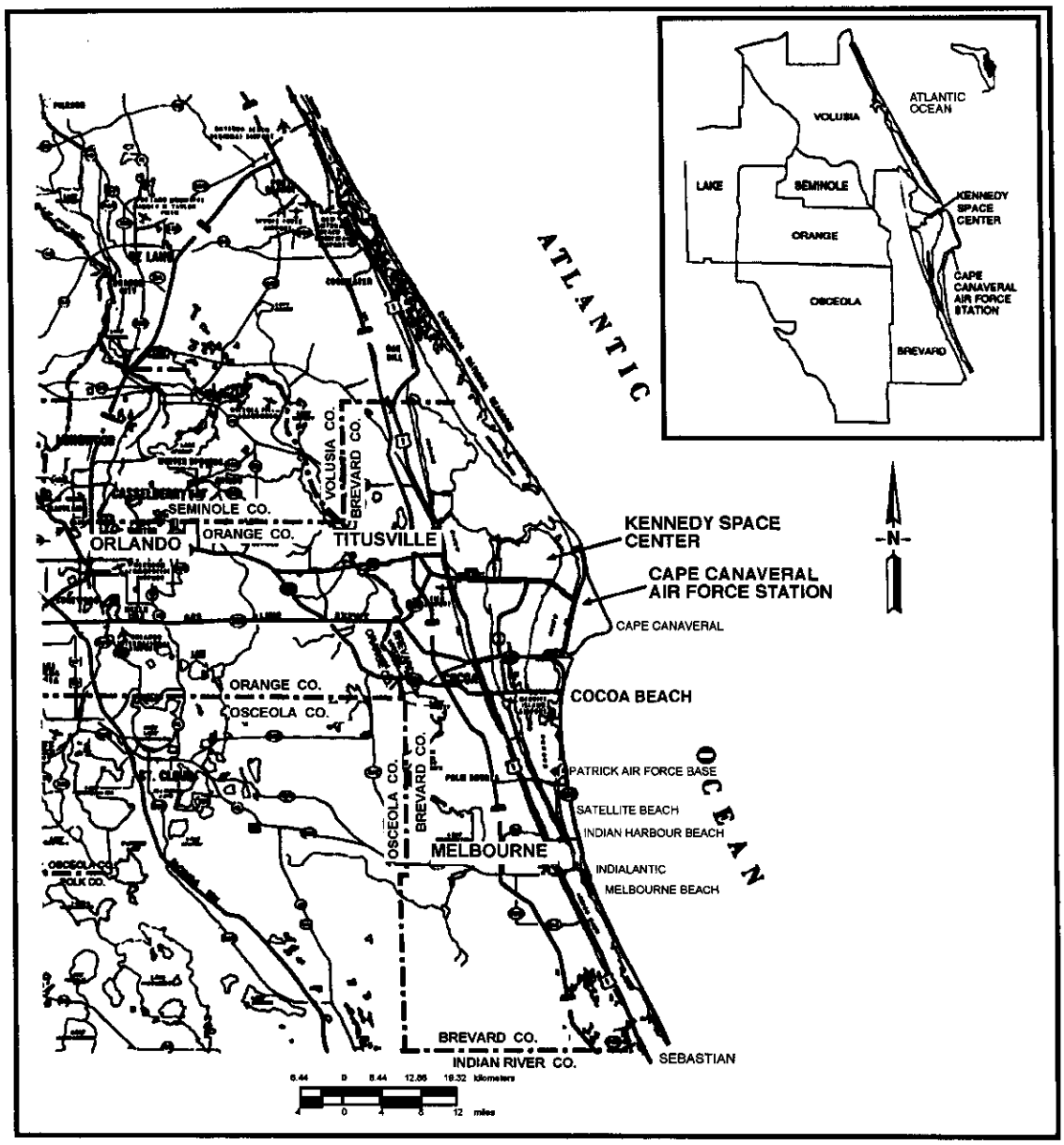

3.2.2 VAFB

VAFB is in the western part of Santa Barbara County, California. The Santa Ynez River divides the base into North and South VAFB. North VAFB generally includes the developed portions of the base, whereas South VAFB includes primarily open space. The city of Lompoc lies to the east, the city of Santa Maria lies to the northeast, and the city of Guadalupe lies to the north. Two unincorporated communities, Vandenberg Village and Mission Hills, are north of the city of Lompoc, and the unincorporated community of Orcutt is north of the

base. The 2000 census lists the following cities and towns in Santa Barbara county: Buellton, Carpinteria, Guadalupe, Lompoc, Santa Barbara, Santa Maria, and Solvang.

The total population of Santa Barbara County increased from 369,608 persons in 1990 to 399,347 in 2000, which was an 8.0% increase. For comparison, the Santa Barbara Association of Governments forecast a 1.3 percent annual growth rate between 1996 and 2000 (USAF, 1998). The VAFB area is shown is Figure 3.2-2.

Figure 3.2-2 Regional Map of VAFB (NASA, 1998)

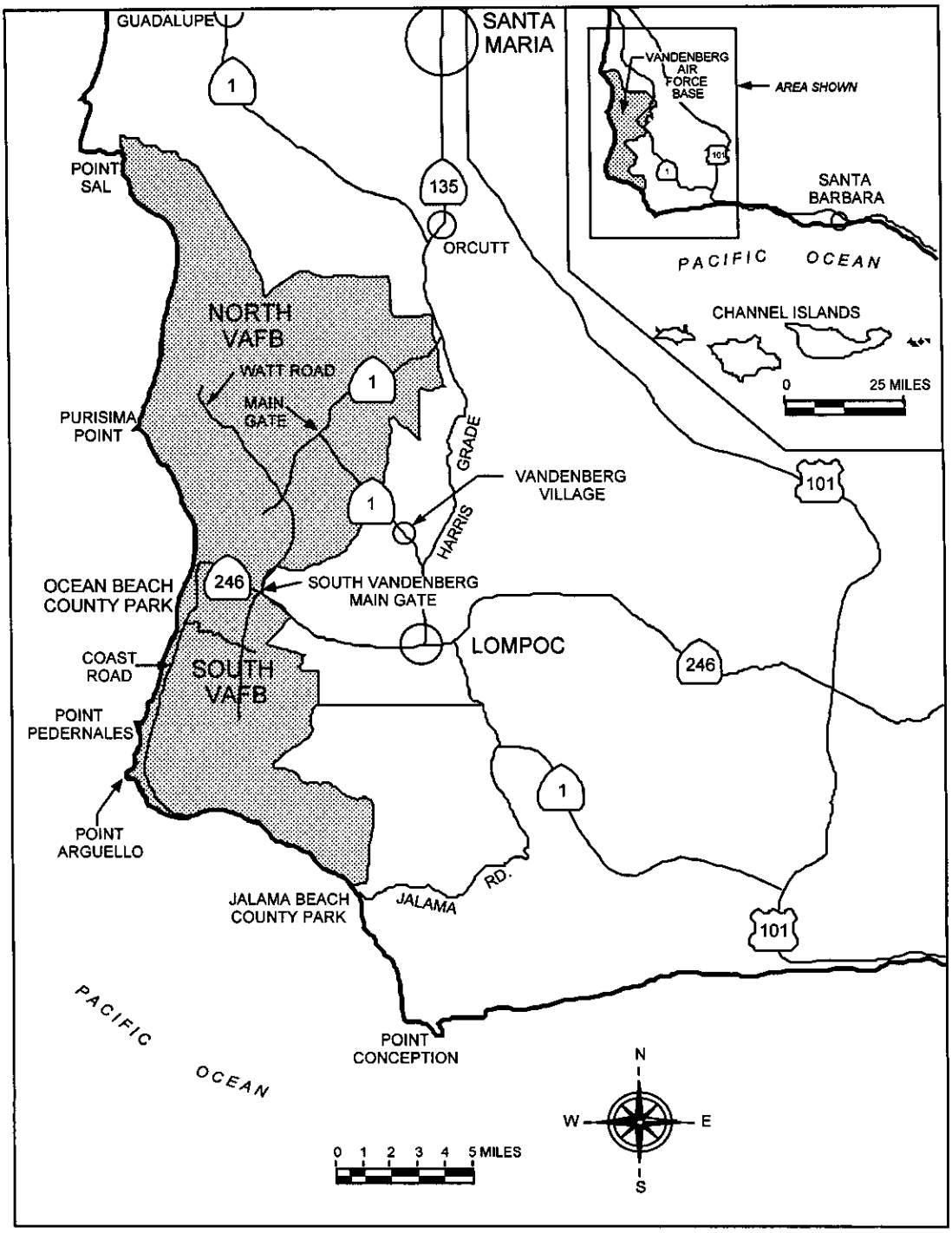

3.3 LAND USE AND AESTHETICS

This section describes the existing environment in terms of land use and aesthetics for the areas within and surrounding CCAFS, KSC, and VAFB.

3.3.1 CCAFS and KSC

3.3.1.1 Land Use

CCAFS encompasses an area of 6,397 hectares (15,800 acres), representing approximately two percent of the total land area of Brevard County. Land uses at CCAFS include launch operations, launch and range support, airfield, port operations, station support area, and open space. The launch operations land use category is present along the Atlantic Ocean shoreline and includes the active and inactive launch sites and support facilities. The launch and range support area is west of the launch operations area and is divided into two sections by the airfield (Skid Strip). The airfield includes a single runway, taxiways, and apron, and is in the central part of the station. The port operations area is in the southern part of the station and includes facilities for commercial and industrial activities. The major industrial area is located in the center of the western portion of the station. This area also includes administration, recreation, and range support facilities. Open space is dispersed throughout the station. There are no public beaches located on CCAFS. All land uses at CCAFS are under the operational control of the U. S. Air Force (USAF, 1998).

KSC is located on the northern part of Merritt Island adjacent to CCAFS and consists of approximately 56,680 hectares (140,000 acres) of land and lagoon waters. This area includes both the Canaveral National Seashore (CNS) and the Merritt Island National Wildlife Refuge (MINWR). NASA maintains operational control over approximately 2,634 hectares (6,507 acres) of KSC. This area comprises the functional area that is dedicated to NASA operations. Approximately 62% of the NASA operational area are developed as facility sites, roads, lawns, and maintained right-of-ways. The remaining undeveloped operational areas are dedicated as safety zones around existing facilities or held in reserve for planned and future expansion. The National Park Service (NPS) and the U.S. Fish and Wildlife Service (USFWS) manage the 53,839 hectares (132,983 acres) that are outside of NASA operational control. The NPS administers 2,694 hectares (6,655 acres) of the CNS, while the USFWS administers 20,626 hectares (50,945 acres) of the CNS and the 30,519 hectares (75,383 acres) of the MINWR (NASA, 1997a).

3.3.1.2 Coastal Zone Management

Federal activity in, or affecting, a coastal zone requires preparation of a Coastal Zone Consistency Determination in accordance with the Federal Coastal Zone Management Act (CZMA) of 1972, as amended (P.L.92-583), and implemented by the National Oceanic and Atmospheric Administration (NOAA) through the State coastal zone management offices. The Florida Department of Community Affairs (FDCA) is the State's coastal management agency. NASA is responsible for making consistency determinations and obtaining concurrence from the respective State coastal zone management agency for NASA approved or funded actions within the coastal zone and USAF is similarly responsible for obtaining concurrence of it consistency determinations for its actions. The U. S. Air Force is responsible for making the final coastal zone consistency determinations for its activities within the State, and the FDCA reviews the coastal zone consistency determination (USAF, 1998). The State of Florida's coastal zone includes the area encompassed by the state's 67 counties and its territorial seas.

3.3.1.3 Recreation

Florida's Indian River Lagoon Estuary System includes Mosquito Lagoon, Canaveral Inlet, Banana River, Indian River, and the Sebastian Inlet. Recreational activities primarily involve the coastal beaches and inland waters of the Indian and Banana rivers. Boating, surfing, water skiing, and fishing are common activities. The beaches along CCAFS are used for launch operations and are restricted from public use. The nearby CNS and MINWR are open to the public, but are closed during some launch operations. Port Canaveral has several cruise-ship terminals.

3.3.1.4 Aesthetics

Topography of the area is generally flat, with elevations ranging from sea level to approximately 6 m (20 ft) above sea level. The most visually significant aspect of the natural environment is the gentle coastline and flat-island terrain. The area has a low visual sensitivity because the flatness of the area limits any prominent vistas. CCAFS and KSC are fairly undeveloped. The most significant man-made features are the launch complexes and various support facilities. Most areas of CCAFS and KSC outside of the developed areas are covered with native vegetation.

3.3.2 VAFB

3.3.2.1 Land Use

VAFB encompasses approximately 39,838 hectares (98,400 acres), representing approximately six percent of the total land area of Santa Barbara County. The greatest use of land on VAFB (90 percent) is for open space. Six percent of VAFB is industrial use. Aircraft operations and maintenance combined with space and missile launch activities account for only two percent of the land use of VAFB. The primary developed area on North VAFB includes residential, administrative, industrial, recreational, open space, and community land uses. The remaining development on north base includes an airfield as well as several testing and launch facilities. The majority of South VAFB is undeveloped. The developed portion of south base includes launch complexes, test and launch facilities, technical support areas, several mountaintop tracking stations, and an administrative and industrial area. Some of the undeveloped areas on South VAFB are leased for grazing.

3.3.2.2 Coastal Zone Management

Federal activity in, or affecting, a coastal zone requires preparation of a Coastal Zone Consistency Determination, in accordance with the CZMA. The California Coastal Zone Management Program is consistent with the California Coastal Zone Conservation Act of 1972, as amended. The U. S. Air Force is responsible for making final coastal zone consistency determinations for its activities within the State, and the California Coastal Commission reviews Federally authorized projects for consistency with the California Coastal Zone Management Program. The coastal zone extends inland on VAFB from approximately 1.2 km (0.75 mile) at the northern boundary to 7.2 km (4.5 miles) at the southern end of the base (USAF, 1998).

3.3.2.3 Recreation

VAFB provides limited public access to the base's shoreline up to the mean high tide line. Jalama Beach County Park is situated just beyond the southern end of the base. The park is closed to the public during some Atlas, Delta, and Titan launches. Ocean Beach County Park is located between North and South VAFB. It is also closed for Atlas, Delta, and Titan launches.

3.3.2.4 Aesthetics

The visual environment in the vicinity of VAFB is varied and characterized by rolling hills covered with chaparral and oak trees, valleys utilized for grazing or

agriculture, and urbanized areas of the Lompoc Valley. Topography is mostly dominated by the Santa Ynez Mountains, which terminate at Point Arguello. Views of the coastline are generally not available from inland locations due to access limitations and topographic barriers.

3.4 HAZARDOUS MATERIALS AND HAZARDOUS WASTE MANAGEMENT

Hazardous materials are substances defined as hazardous by the Comprehensive Environmental Response, Compensation, and Liability Act (CERCLA), the Toxic Substances Control Act (TSCA), and the Hazardous Materials Transportation Act (HMTA). In general, hazardous materials include substances that, because of their quantity, concentration, or physical, chemical, or infectious characteristics, may present substantial danger to public health or welfare, or to the environment, when released. U. S. Air Force Instruction (AFI) 32-7086, Hazardous Materials Management, establishes procedures and standards that govern management of hazardous materials on U. S. Air Force installations.

Management of hazardous waste must comply with the Resource Conservation and Recovery Act (RCRA), as amended by the Hazardous and Solid Waste Amendments of 1984 (HSWA). U.S. EPA administers RCRA. RCRA requires that hazardous wastes be treated, stored, and disposed of to minimize the present and future threat to human health and the environment. U. S. Air Force guidance in AFI 32-7042, Solid and Hazardous Waste Compliance, provides a framework for complying with environmental standards applicable to hazardous waste.

The Federal Pollution Prevention Act (PPA) of 1990 established pollution prevention as a national objective. It is a Department of Defense (DoD) acquisition policy to eliminate and reduce the use of hazardous materials during a system's acquisition (DoD 5000.2-R, Mandatory Procedures for Major Defense Acquisition Programs and Major Automated Information System Acquisition Programs). U. S. Air Force Policy Directive (AFPD) 32-70, Environmental Quality, outlines the U. S. Air Force policy for pollution prevention and references AFI 32-7080, Pollution Prevention Program, which defines the U. S. Air Force's Pollution Prevention Program requirements. AFI 32-7080 instructs all USAF installations to reduce hazardous material usage and pollutant releases (USAF, 1998).

NASA will promote the Agency strategy of Environmental Excellence consistent with the requirements of Executive Order (EO) 12856, " Federal Compliance with Right-To-Know Laws and Pollution Prevention Requirements." NPG 8820.3 outlines NASA's guidelines for integrating EO 12856 as well as other recent EO's into NASA Centers' existing plans and procedures. NPG 8820.3 describes procedures and guidelines for toxic release inventory reporting (EO 12856); source reduction and recycling reporting (EO 12856); emergency planning (EO

12856); emergency notification (EO 12856); Material Safety Data Sheets (EO 12856); extremely hazardous substances inventory reporting (EO 12856); NASA facility pollution prevention program planning (EO 12856); recycling for solid waste prevention (EO 13101); affirmative procurement (EO 13101); procurement of energy efficient computers (EO 12845); and procurement of alternative fueled vehicles (EO 12844). NPG 8820.3 covers the requirements of EO 13101 (Procurement of EPA guideline items), EO 12843 (Procurement of ozone-depleting substances), EO 12844 (Procurement of alternative fueled vehicles), and EO 12845 (Procurement of energy-efficient computers).

3.4.1 CCAFS and KSC

3.4.1.1 Hazardous Materials Management

Numerous types of hazardous materials are used to support the missions and general maintenance operations at CCAFS and KSC. Management of hazardous materials, excluding hazardous fuels, is the responsibility of each individual or organization. Each organization has a supply organization and uses a "pharmacy" control approach to track hazardous materials and to minimize hazardous waste generation by minimizing the use of hazardous materials. The Patrick Air Force Base (PAFB) supply system is the primary method of purchasing or obtaining hazardous materials. The Joint Propellants Contractor (JPC) controls the purchase, transport, and temporary storage of hazardous propellants. (USAF, 1996a) Response to spills of hazardous materials is covered under JHB-2000 revision A (March 2002), the Consolidated Comprehensive Emergency Management Plan (hereafter referred to as CCEMP). CCEMP establishes uniform policy guidelines for the effective mitigation of, preparation for, response to, and recovery from a variety of emergency situations. The CCEMP is applicable to all NASA, Air Force, and NASA/Air Force Contractor organizations and to all other Government agencies located at KSC, CCAFS, and Florida Annexes. To ensure continuity of operations, the application of the provisions of the CCEMP will be executed by responding organizations through the Incident Management System (IMS). Resource Conservation and Recovery Act (RCRA) requirements will be accomplished by the directives listed in the respective permits issued to KSC/CCAFS (OPLAN 32-3 and KHB 8800.6).

3.4.1.2 Hazardous Waste Management

Hazardous waste management at CCAFS is regulated under RCRA and the Florida Administrative Code (FAC) 62-730. These regulations are implemented by 45 SW OPlan 32-3, which addresses the proper identification, management, and disposition of hazardous waste on CCAFS (USAF, 1996a).

All DoD-generated hazardous waste is labeled with the U.S. EPA identification number for CCAFS, under which it is transported, treated, and disposed. Individuals or organizations generating hazardous waste at CCAFS are responsible for administering all applicable regulations and plans regarding hazardous waste. Producers of hazardous waste must also comply with applicable regulations regarding the temporary accumulation of waste at the process site. CCAFS reported 233,410 kg (513,507 lb) of DoD-generated hazardous waste in 1996. Typical hazardous wastes include various solvents, paints and primers, sealants, photo-developing solutions, adhesives, alcohol, oils, fuels, and various process chemicals (USAF, 1998).

Individual contractors and organizations maintain hazardous waste satellite accumulation points (SAPs) and 90-day hazardous waste accumulation areas in accordance with 45 SW OPlan 19-14. A maximum of 208 liters (55 gallons) per waste stream of hazardous waste can be accumulated at a SAP. There is no limit to the volume of waste that can be stored at a 90-day accumulation area, but wastes must be taken to the permitted storage facility or disposed of off site within 90 days.

The permitted storage facility (RCRA Part B Permit, Number HO01-255040) is operated within Buildings 44200/44205. The facility is permitted to store hazardous wastes for up to one year under the current Florida Department of Environmental Protection (FDEP) permit and is operated by the Launch Base Support (LBS) contractor. However the permit does not allow the waste storage site facility to store waste hydrazine (N_2H_4), monomethylhydrazine (MMH), or nitrogen tetroxide (NTO). At KSC and CCAFS, the Joint Propellant Contractor (JPC) is responsible for the collection and transportation of most hazardous waste (including propellant waste) from accumulation sites to a 90-day hazardous waste accumulation area, to the permitted hazardous waste storage facility, or to a licensed, permitted disposal facility off station (USAF, 1998 and Ouellette, 2002).

NASA has developed a program of managing and handling hazardous and controlled wastes at KSC in compliance with RCRA and Florida regulations. The organizational and procedural requirements of the KSC hazardous waste management program are contained in KSC Handbook (KHB) 8800.7 "Hazardous Waste Management". This manual and supporting documents delineate the procedures and methods to obtain/provide hazardous waste support, establish and approve operations and maintenance instructions, and provide instructions to maximize resource recovery and minimize costs (NASA, 1997a).

The control of most hazardous wastes at KSC and CCAFS is assigned to the Joint Base Operations Support Contractor. The Joint Base Operations Support Contractor directs and documents relevant actions for hazardous or controlled waste handling, sampling, storage, transportation, treatment, and disposal/recovery for compliance with all local, State, and Federal regulations.

KSC has an operating permit from the FDEP for the storage, treatment, and disposal of hazardous waste. The main facilities operating under this permit are the Hazardous Waste Storage Facility (K7-165) in the LC-39 area, which handles liquid hazardous wastes, and an adjacent Facility (K7-164), which handles solid hazardous wastes (NASA, 1997a and Ouellette,2002). NASA has identified 118 processes at KSC that use hazardous materials or generate hazardous waste. KSC reported that 158,000 kg (347,600 lb) of hazardous wastes were generated during FY99 (NASA, 2001)

3.4.1.3 Pollution Prevention

The 45 SW Pollution Prevention Program Guide (PPPG) and Pollution Prevention Management Action Plan (PPMP) satisfy requirements of the Pollution Prevention Act of 1990. The PPPG also complies with requirements in DoD Directive 4210.15, AFI 32-7080, and the U. S. Air Force Installation PPPG. The PPPG establishes the overall strategy, delineates responsibilities, and specifies objectives for reducing pollution of the ground, air, surface water, and groundwater (USAF, 1998).

KSC has established a Pollution Prevention Working Group (PPWG) to review all aspects of the KSC Pollution Prevention Program and to identify areas for additional pollution prevention activities. The team consists of KSC and contractor personnel. The NASA Acquisition Pollution Prevention Office assists KSC and other NASA centers in identifying, validating, and implementing less hazardous materials and processes.

3.4.2 VAFB

3.4.2.1 Hazardous Materials Management

VAFB requires all contractors using hazardous materials to submit a hazardous materials contingency plan prior to working on base. Distribution of hazardous materials at VAFB is coordinated from a single-issue point. Management of hazardous materials obtained directly from off-base suppliers by contractors is the responsibility of the individual contractor. Hazardous propellants are controlled by the base propellant contractor, which handles the purchase, transport, temporary storage, and loading of hypergolic fuels and oxidizers. They are stored at the Hypergolic Storage Facility (Buildings 974 and 975) on South VAFB. Spills of hazardous materials are covered under the Hazardous Materials Emergency Response Plan, 30 SW Plan 32-4002, which ensures that adequate and appropriate guidance, policies, and protocols regarding hazardous material incidents and associated emergency response are available to all installation personnel (USAF, 1998).

3.4.2.2 Hazardous Waste Management

RCRA and the California Environmental Protection Agency's Department of Toxic Substances Control (under the California Health and Safety Code and the California Administrative Code) regulate hazardous wastes at VAFB. These regulations require that hazardous waste be handled, stored, transported, disposed, or recycled according to defined procedures. The VAFB Hazardous Waste Management Plan (HWMP), 30 SW Plan 32-7043-A, implements the above regulations and outlines the procedures for disposing of hazardous waste. All hazardous waste generated is labeled with the U.S. EPA identification number for VAFB, under which it is transported, treated, and disposed. Individual contractors and organizations at VAFB are responsible for administering all applicable regulations and plans regarding hazardous waste.

VAFB generated 910,000 kg (2,002,000 lb) of hazardous waste in 1996. Typical hazardous wastes include various solvents, paints and primers, sealants, photo-developing solutions, adhesives, alcohol, oils, fuels, and various process chemicals. Hazardous waste is stored at its point of origin until the waste container is full, or until 60 days following the day the container first received waste (whichever is first). The waste is then transported to the permitted consolidated Collection Accumulation Point (CAP) for temporary storage for no longer than 30 days. Waste hypergolic fuel is stored at a separate consolidated Hypergolic Storage Facility CAP. Hazardous waste can be stored at the permitted storage facility (Building 3300) for up to one year from the date of accumulation. Wastes not listed in the Part B permit must be shipped to an off-base treatment, storage, or disposal facility within the allowable 90-day storage period (USAF, 1998).

3.4.2.3 Pollution Prevention

The VAFB PPMP, 30 SW Plan 32-7080, satisfies requirements of the Pollution Prevention Act of 1990 (USAF, 1996b). The PPMP also complies with requirements in DoD Directive 4210.15, AFI 32-7080, and the U. S. Air Force Installation PPPG. The PPMP establishes the overall strategy, delineates responsibilities, and sets specific objectives for reducing pollution of the ground, air, surface water, and groundwater.

3.5 HEALTH AND SAFETY

The areas in and around CCAFS, KSC, and VAFB that could be affected by payload processing, transport, and launch are the subject of health and safety concerns. Range safety regulations for both CCAFS and VAFB are contained in Eastern and Western Range Safety Policies and Processes (EWR 127-1, 1997). As mandated by EWR 127-1, Range safety organizations review, approve, monitor, and impose safety holds, when necessary, on all pre-launch and launch

operations. The objective of the range safety program is to ensure that the general public, launch area personnel, foreign land masses, and launch area resources are provided an acceptable level of safety, and that all aspects of pre-launch and launch operations adhere to public laws.

Hazardous materials such as propellant, ordnance, chemicals, and booster/payload components are transported in accordance with U. S. Department of Transportation (DOT) regulations for interstate shipment of hazardous substances (Title 49 CFR 100-199). Hazardous materials such as liquid rocket propellant are transported in specially designed containers to reduce the potential risk of an unintentional release should an accident occur (USAF, 1998).

3.5.1 CCAFS and KSC

3.5.1.1 Regional Safety

CCAFS, KSC, the City of Cape Canaveral, and Brevard County have a mutual-aid agreement in the event of an on- or off-station emergency. During launch activities, CCAFS maintains communication with KSC, Brevard County Emergency Management, the Florida Marine Patrol, the U.S. Coast Guard, and the state warning point, Division of Emergency Management. Range Safety monitors launch surveillance areas to ensure that risk to people, aircraft, and surface vessels is within acceptable limits. Control areas and airspace are closed to the public as required (USAF, 1998).

3.5.1.2 On-Station Safety

Launches are not allowed if an undue hazard exists for persons and property due to potential dispersion of hazardous materials or propagation of blast overpressure. The 45th Space Wing (45 SW) has prepared detailed procedures to be used to control toxic gas hazards. Atmospheric dispersion computer models are run to predict toxic hazard corridors (THCs) for both nominal and aborted launches, as well as spills or releases of toxic materials from storage tanks or that occur during loading or unloading of tanks. Range Safety uses the THCs to reduce the risk of exposure of CCAFS and KSC personnel and the general public to toxic materials, including toxic gases.

JHB-2000 revision A (March 2002) is the Consolidated Comprehensive Emergency Management Plan (CCEMP) as described in paragraph 3.4.1.1. The 45th SW Oplan 32-3 addresses emergency response to hazardous material incidents. For a NASA launch, the Launch Disaster Control Group (LDCG) is a joint NASA/USAF emergency response team formed prior to each launch and situated at a fallback location. For a NASA launch, the Disaster Control Group

(DCG) is a joint NASA/USAF emergency response team that is activated for nonlaunch-related disasters at CCAFS (USAF, 1998).

3.5.2 VAFB

3.5.2.1 Regional Safety

Santa Barbara County has prepared a Hazardous Material Response Plan that is used to coordinate disaster response countywide. The county requires communities to have their own emergency response plans. The county incorporated these plans into a comprehensive Multihazard Functional Plan. Because of the potential for VAFB operations to affect off-base areas, VAFB plays a prime role in regional emergency planning. VAFB and the city of Lompoc have entered into a mutual aid agreement. VAFB would assume control of the response action if a launch mishap occurs in Lompoc. In the event of a launch vehicle mishap affecting other areas outside VAFB, the On-Scene DCG from VAFB would respond to the accident upon request of the county (USAF, 1998).

3.5.2.2 On-Base Safety

Range Safety recommends a launch hold if an undue hazard to persons and property exists due to potential dispersion of hazardous materials or debris, or propagation of blast overpressure. ACTA, a base contractor, runs hazard prediction models before a launch to predict toxic hazard corridors, debris impact areas, and overpressure focusing areas. The 30 SW reviews the plotted output from the air dispersion models, which reveal predicted downwind concentrations of toxic gases resulting from potential liquid propellant spills. Range Safety uses these predictions to reduce the risk of exposure of VAFB personnel and the general public to toxic materials, including toxic gases.

3.6 GEOLOGY

This section provides an overview of the physiography, geology, and geologic hazards in the vicinity of CCAFS, KSC, and VAFB.

3.6.1 CCAFS and KSC

The barrier island forming Cape Canaveral and underlying CCAFS is composed of relict beach ridges formed by wind and wave action. The average land surface elevation is approximately 3 m (10 ft) above mean sea level (MSL). The higher naturally occurring elevations occur along the eastern portion of CCAFS. From these higher elevations, there is a gentle slope to lower elevations (i.e.,

the marshlands along the Banana River). Merritt Island is composed of relict beach ridges on the eastern side of the island and has an undulating land surface. The troughs are near sea level, and the ridges rise to a maximum of about 3 m (10 ft) above sea level. The western side of Merritt Island is nearly level, sloping from 1.2 m (4 ft) above MSL near the center of the island to 0.2 m (0.5 ft) above MSL at the shoreline of Indian River. Surface deposits on Merritt Island are of Pleistocene and Recent ages and consists primarily of sand and sandy coquina (NASA, 1997a).

Four stratigraphic units generally define the geology underlying CCAFS and KSC: the surficial sands, the Caloosahatchee Marl, the Hawthorn Formation, and the limestone formations of the Floridian aquifer. The surficial sands immediately underlying the surface are marine deposits that extend to depths of approximately 3 to 9 m (10 to 30 ft). The Caloosahatchee Marl underlies the surficial sands and consists of sandy shell marl that extends to a depth of 21 m (70 ft) below the surface. The Hawthorn Formation, which consists of sandy limestone and clays, underlies the Caloosahatchee Marl and is the regional confining unit for the Floridian aquifer. This formation is generally 24 to 36 m (80 to 120 ft) thick, typically extending to a depth of approximately 54 m (180 ft) below the surface.

Sinkholes are the principal geologic hazard in central Florida and are a result of subterranean cavities. Sinkholes form when overlying soils collapse into these existing cavities. CCAFS and KSC are not located in an active sinkhole area. The CCAFS and KSC are not prone to sinkholes, since the limestone formations are over 30 m (100 ft) below the ground surface, and confining units minimize recharge to the limestone (USAF, 1996b). CCAFS and KSC are located in Seismic Hazard Zone 0 as defined by the Uniform Building Code. Seismic Zone 0 represents a very low potential risk for large seismic events (USAF, 1998; NASA, 1997a). The Uniform Building Code is referenced here since it provides a useful metric for comparison of seismic hazards.

3.6.2 VAFB

Topography within VAFB is varied, ranging from sea level to about 600 m (2,000 ft) MSL in the Santa Ynez Mountains. North VAFB lies within the Coast Range geomorphic province while South VAFB lies within the Transverse Ranges geomorphic province. Coastal sand dunes, alluvium, and underlying marine sedimentary rocks characterize the geology of VAFB.

Earthquakes are a major hazard in California. According to the U.S. Geological Survey (USGS), the severity of an earthquake is expressed in terms of both magnitude and intensity. Magnitude, which is commonly measured logarithmically using the Richter Magnitude Scale, relates to the amount of seismic energy released at the hypocenter of the earthquake and is represented by a single number. Intensity, which is commonly measured using the Modified

Mercalli Intensity Scale, relates to the observed effects of ground shaking on people, buildings, and natural features and varies from place to place (USGS, 1989). Numerous onshore and offshore faults have been mapped within the vicinity of VAFB. While most faults are inactive and not capable of surface fault rupture or of generating earthquakes, more than 90 earthquakes ranging in magnitude from 3.0 to 7.3 on the Richter Magnitude Scale have occurred within a 32 km (20 mi) radius of the project area since 1900. VAFB is located in a Seismic Zone IV, as defined by the Uniform Building Code. Seismic Zone IV is characterized by areas likely to sustain major damage from earthquakes, and corresponds to intensities of VIII or higher on the Modified Mercalli Intensity Scale (USAF, 1998). The Uniform Building Code is referenced here since it provides a useful metric for comparison of seismic hazards.

3.7 WATER RESOURCES

The Federal Clean Water Act (CWA) establishes a comprehensive approach to cleaning up and maintaining the quality of the Nation's surface waters. This approach is most commonly known by the National Pollution Discharge Elimination System permits (NPDES), which control point source pollution, and by section 319 (formerly section 208) area-wide non-point source (NPS) pollution control management planning and associated best management practices (BMPs). The CWA authorizes delegation of the NPDES permitting program to qualified States and Federally recognized Tribes and transfer of Federal funds for water quality management to States and Federally recognized Tribes that agree to adopt NPS plans and develop BMPs. Both Florida and California have been delegated NPDES permitting authority and have adopted section 319 NPS plans and BMPs. The CWA, in section 404, also creates a wetlands permitting program, which has been delegated by U.S. EPA to the U.S. Army Corps of Engineers (COE). Neither Florida nor California has assumed responsibility for the section 404 permitting program. A related statute, the Safe Drinking Water Act, establishes Federally delegated State-implemented programs for regulating groundwater quality.

Executive Order (EO) 11988, Floodplain Management, directs Federal agencies to avoid to the extent possible the long- and short-term adverse impacts associated with occupancy and modification of floodplains and notify landowners of proposed activities affecting the floodplain. AFI 32-7064 (Chapter 4, Floodplain Management and Wetlands Protection) requires the U. S. Air Force to prepare a Finding of No Practicable Alternatives (FONPA) before construction within a floodplain (USAF, 1998). Executive Order (EO) 11990, Protection of Wetlands, directs Federal agencies to provide leadership and to take action to minimize the destruction, loss or degradation of wetlands. NASA regulations at Title 14 CFR subpart 1216.2 govern compliance by NASA with EO 11988 and EO 11990.

3.7.1 CCAFS and KSC

The St. John's River Water Management District (SJRWMD) and the FDEP issue the Environmental Resource Permits, which include storm water and wetlands management, in coordination with the COE.

3.7.1.1 Groundwater.

There are three aquifer systems underlying CCAFS and KSC: the surficial aquifer system, the intermediate aquifer system, and the Floridian aquifer system. The surficial aquifer system, which comprises generally sand and marl, is under unconfined conditions and is approximately 21 m (70 ft) thick. The water table in the aquifer is generally a meter (3.3 ft) or less below the ground surface. Recharge to the surficial aquifer is principally by percolation of rainfall and runoff. A confining unit composed of clays, sands, and limestone separates the surface aquifer from the underlying Floridian aquifer. The Floridian aquifer is the primary source of potable water in central Florida and is composed of several carbonate units with highly permeable zones. These two main aquifers are separated by nearly impermeable confining units and contain three shallow aquifers referred to as the intermediate aquifer system. Groundwater in the Floridian aquifer at CCAFS is highly mineralized. CCAFS and KSC receive their potable water from the city of Cocoa, which pumps water from the Floridian aquifer. (USAF, 1998)

3.7.1.2 Surface Water

CCAFS and KSC are located within the Florida Middle East Coast Basin. Florida's Indian River Lagoon Estuary System includes Mosquito Lagoon, Canaveral Inlet, Banana River, Indian River, and the Sebastian Inlet. Surface drainage at CCAFS generally flows to the west into the Banana River. The 100-year floodplain on CCAFS extends 2.1 m (7 ft) above MSL on the Atlantic Ocean side and 1.2 m (4 ft) above MSL on the Banana River side. Local areas designated as Outstanding Florida Water (OFW) include most of Mosquito Lagoon and the Banana River, Indian River Aquatic Preserve, Banana River State Aquatic Preserve, Pelican Island National Wildlife Refuge, and CNS. These water bodies are afforded the highest level of protection, and any compromise of ambient water quality is prohibited. The U.S. EPA has also designated the Indian River Lagoon System as an Estuary of National Significance. Estuaries of National Significance are identified to balance conflicting uses of the estuaries while restoring or maintaining their natural character. The Banana River has been designated a Class III surface water, as described by the CWA. Class III standards are intended to maintain a level of water quality suitable for recreation and the production of fish and wildlife communities (USAF, 1998).

3.7.1.3 Water Quality

NASA manages the monitoring of surface water quality on and near CCAFS and KSC at 11 long-term monitoring stations. The FDEP has classified water quality in the Florida Middle East Coast Basin as poor to good based on the physical and chemical characteristics of the water. The upper reaches of the Banana River and the lower reaches of Mosquito Lagoon have generally good water quality due to lack of urban and industrial development in the area. However, certain parameters (i.e., primarily phenols and silver) consistently exceed State water quality criteria, with hydrogen ion concentration (pH), iron, and aluminum occasionally exceeding criteria. Nutrients and metals, when detected, have generally been below Class II standards (NASA, 1995a). Areas of poor water quality exist along the western portions of the Indian River, near the city of Titusville, and in Newfound Harbor in southern Merritt Island.

3.7.2 VAFB

The State Water Resources Control Board (SWRCB) and the Regional Water Quality Control Board (RWQCB) administer the CWA and State water regulations in California. The Central Coast Region RWQCB is the local agency responsible for the VAFB area. The RWQCB is responsible for management of the NPDES permits process for California. State regulations require a Waste Discharge Requirement (WDR) for permitting discharge. A Report of Waste Discharge (RWD) is required for actions that would involve discharge of waste to surface and/or groundwater. The California Porter-Cologne Water Quality Act implements the NPDES program for the State (USAF, 1998).

3.7.2.1 Groundwater

The main sources of potable water in the region are from the San Antonio Creek Valley groundwater basin, the Lompoc Plain groundwater basin, the Lompoc Upland groundwater basin, and the Lompoc Terrace groundwater basin. These groundwater basins are pumped for potable water for VAFB and the surrounding communities.

3.7.2.2 Surface Water

The Santa Ynez River and San Antonio Creek are the two major surface water features on VAFB. The Santa Ynez River has a drainage area of approximately 2,333 square kilometers (900 square miles) and discharges into the Pacific Ocean. Flow in the river is generally intermittent and mainly in response to rainfall events. San Antonio Creek has a drainage area of 400 square kilometers (154 square miles) and discharges into a small lake in the dunes area of North VAFB. Its flow is intermittent in its upper reaches, but perennial throughout VAFB. Other major drainages on VAFB include Cañada Tortuga

Creek, Bear Creek, Cañada Honda Creek, and Jalama Creek (ASTROTECH, 1993).

3.7.2.3 Water Quality

The majority of water used at VAFB is supplied by the local aquifers. VAFB also receives supplemental potable water from the State Water Project. Groundwater quality is variable but meets all National Primary Drinking Water Regulation standards. Continued overdraft of the groundwater basins could lead to a decline in water table levels and a compaction of the basins. A slight decrease in water quality has been occurring in the region due to the use of water for irrigation. As this water flows through the soil back to the basin, it entrains salts and leads to a buildup of salts in the groundwater (USAF, 1998).

3.8 AIR QUALITY

This section describes air quality resources at CCAFS, KSC, and VAFB for the atmosphere at altitudes below 914 m (3000 ft), which contains the atmospheric boundary layer for CCAFS, KSC, and VAFS as documented in sections 3.8.2.2 and 3.8.3.2. The lower atmosphere, also known as the troposhere, is composed of two layers: 1) the atmospheric boundary layer ranging from 0 to 2,000 m (0 to 6,600 ft) in altitude and 2) the free troposphere ranging from 2,000 to 10,000 m (6,600 to 32,800 ft) in altitude. Rapid mixing within the atmospheric boundary layer insures that chemicals released within the atmospheric boundary layer quickly mix throughout the atmospheric boundary layer. Atmospheric monitoring for chemicals at CCAFS, KSC, and VAFB is within the atmospheric boundary layer where people live and work.

3.8.1 Federal Regulatory Framework

Air quality at CCAFS, KSC, and VAFB is regulated Federally under Title 40 CFR 50 (National Ambient Air Quality Standards [NAAQS]), Title 40 CFR 51 (Implementation Plans), Title 40 CFR 61 and 63 (National Emission Standards for Hazardous Air Pollutants [NESHAPs]), and Title 40 CFR 70 (Operating Permits).

The National Primary Ambient Air Quality Standards define the levels of air quality necessary to protect the public health with an adequate margin of safety. The National Secondary Ambient Air Quality Standards define levels of air quality necessary to protect the public welfare from adverse effects of a pollutant. There are standards for ozone, carbon monoxide (CO), oxides of nitrogen (NO_X), sulfur dioxide (SO_2), particulate matter equal to or less than 10 microns in diameter (PM_{10}), and lead. An area with air quality better than the NAAQS is designated as being in attainment while areas with worse air quality are classified as non-attainment areas.

Federal actions are required to conform to any State Implementation Plan approved or promulgated under Section 110 of the Clean Air Act (CAA). A conformity determination is required for each pollutant resulting from a Federal action for which the total of direct and indirect emissions in a non-attainment or maintenance area would equal or exceed de minimis thresholds (listed in Title 40 CFR 51.853). De minimis is Latin for "of minimum importance" or "trifling." Essentially de minimis thresholds refer to values so small that the law will not consider them.

NESHAPs regulate hazardous air emissions from stationary sources. The U.S. EPA lists emission standards for specific types of stationary sources. These standards are referred to as Maximum Available Control Technology (MACT) standards. The only section of the NESHAPs regulations that applies to the proposed activity is Title 40 CFR 63 Subpart GG, which applies to facilities that manufacture or rework commercial, civil, or military aerospace vehicles or components and that are major sources of hazardous air pollutants (HAPs).

Title V of the Clean Air Act Amendments (CAAA) of 1990 requires all major sources to have an operating permit. This permit incorporates all applicable Federal requirements under the CAA. A major source is defined as one that can: (1) emit 90.7 metric tons (100 tons) per year of any regulated air pollutant within an area that is in attainment for that pollutant; (2) emit 9.1 metric tons (10 tons) per year of any one of the 189 HAPs; or (3) emit 22.7 metric tons (25 tons) per year of total HAPs. The major source thresholds can be lower if the source is in a non-attainment area for a pollutant.

Title 40 CFR 82 seeks to prevent damage to the ozone layer by Class I and Class II Ozone-Depleting Substances (ODSs). It contains subparts addressing production and consumption controls, servicing of motor vehicle air conditioners, bans on nonessential products, Federal procurement, recycling and emissions reduction, and alternative compounds.

3.8.2 CCAFS and KSC

3.8.2.1 Florida Regulatory Framework

Air quality for the CCAFS and KSC area is regulated under Florida Administrative Code (FAC) 62-200 et seq. As shown in Table 3.8-1, the Florida Ambient Air Quality Standards (FAAQS) are not significantly different from the NAAQS. FAC 62-210 establishes general requirements for stationary sources of air pollutant emissions and provides criteria for determining the need to obtain an air construction or air operation permit. FAC 62-213 implements Federal rule Title 40 CFR 70, which provides a comprehensive operation permit system for permitting major sources of air pollution (Title V sources). CCAFS and KSC are classified as major sources because emissions are above major source thresholds. KSC and CCAFS have Title V permits.

Table 3.8-1 National and Florida Ambient Air Quality Standards (USAF, 1998)

Pollutant	Averaging Time	Florida Standards (ug/m³)	National Standards (ug/m³)	
			Primary	Secondary
Ozone	1 Hour	235	235	235
Carbon Monoxide	8 Hours	10,000	10,000	----
	1 Hour	40,000	40,000	----
Nitrogen Dioxide	Annual	100	100	100
Sulfur Dioxide	Annual	60	80	----
	24 Hours	260	365	----
	3 Hours	1,300	----	1,300
PM10	Annual	50	50	50
	24 Hours	150	150	150
Lead	Quarterly	1.5	1.5	1.5

ug/m³ = microgram per cubic meter

3.8.2.2 Meteorology

The climate in the CCAFS and KSC area is characterized as maritime-tropical with humid summers and mild winters. The area experiences moderate seasonal and daily temperature variations. Average annual temperature is 22°C (71°F) with a minimum monthly average of 13°C (60°F) in January and a maximum of 28°C (81°F) in July. During the summer, the average daily humidity range is 70 to 90 percent. The winter is drier with humidity ranges of 55 to 65 percent.

Prevailing winds during the winter are steered by the jet stream aloft and are frequently from the north and west. As the jet stream retreats northward during the spring, the prevailing winds shift and come out of the south. During the summer and early fall, as the land-sea temperature difference increases and the Bermuda high-pressure region strengthens, the winds originate predominantly from the south and east.

Under normal midday weather conditions, surface mixing occurs over a layer with an average daily maximum value of 700 to 900 m (2,300 to 2,950 ft) during the winter and 1190 to 1400 m (3,900 to 4,600 ft) during the summer. The mixed layer is rarely capped by a strong temperature inversion. At the surface, easterly sea breezes with moderate speeds of 8 to 16 kph (5 to 10 mph) and depths on the order of 150 to 305 m (500 to 1,000 ft) occur nearly every day during the summer and early fall.

Most periods of high winds and heavy rainfall occur during thunderstorms, which develop mainly from May through September. The CCAFS and KSC region has the highest number of thunderstorms in the world during the summer months. On the average, there are thunderstorms on 76 out of 180 days. Over 70 percent of the annual 122 cm (48 in) of rain occurs during the summer. During

thunderstorms, wind gusts of more than 97 kph (60 mph) and rainfall of over 2.5 cm (1.0 in) often occur in a one-hour period. Numerous lightning strikes to the ground occur in the area surrounding CCAFS and KSC. Hurricanes can also occur, normally between August and October (USAF, 1998).

3.8.2.3 Regional Air Quality

CCAFS and KSC are in Brevard County, which has been designated by both the U.S. EPA and the FDEP to be in attainment for ozone, SO_X, NO_X, CO, and PM_{10}. Table 3.8-2 shows ambient air concentrations measured at nearby stations for criteria pollutants.

Table 3.8-2 Ambient Air Concentrations for Criteria Pollutants Near CCAFS and KSC (USAF, 2000a)

Pollutant	Period	Station	1996 (ug/m^3)	1997 (ug/m^3)	1998 (ug/m^3)
Ozone	(1-hr Highest)	Cocoa Beach	180	190	294
	(1-hr Highest)	Palm Bay	180	180	220
CO	(1-hr Highest)	Winter Park	4,600	4,600	4,500
	(8-hr Highest)	Winter Park	2,300	3,400	2,900
NO_X	(Annual)	Winter Park	24	24	21
SO_X	(3-hr Highest)	Winter Park	126	75	76
	(24-hr Highest)	Winter Park	31	18	21
	(Annual)	Winter Park	4	4	5
PM_{10}	(24-hr Highest)	Merritt Island	74	33	NA
	(24-hr Highest)	Titusville Airport	72	32	157
	(Annual)	Merritt Island	18	18	NA
	(Annual)	Titusville Airport	16	17	21

NA = Not Available
ug/m^3 = micrograms per cubic meter

3.8.2.4 Air Emissions

The 1997 Air Emissions Report for CCAFS reported the following annual emissions from stationary sources: 365.3 metric tons (402.8 tons) of NO_X, 141.1 metric tons (155.6 tons) of CO, 30.2 metric tons (33.3 tons) of SO_2, 63.5 metric tons (70.0 tons) of PM_{10}, and 58.6 metric tons (64.6 tons) of volatile organic compounds (USAF, 2000a). Emissions at altitudes less than 915 m (3,000 ft) from launches at CCAFS during 1995 (15 launches of Atlas, Delta, and Titan vehicles) were estimated to be 12.1 metric tons (13.3 tons) of NO_X and 130.7 metric tons (144.1 tons) of PM_{10} (USAF, 1998). Air emissions from stationary sources at KSC in 1994 were estimated to be 12.9 metric tons (14.2 tons) of PM_{10}, 172.0 metric tons (189.6 tons) of SO_2, 69.1 metric tons (76.2 tons) of NO_X, 29.0 metric tons (32.0 tons) of CO, 110.9 metric tons (122.3 tons) of

volatile organic compounds (VOCs), and 145.0 metric tons (159.9 tons) of HAPs (NASA, 1997a).

3.8.3 VAFB

3.8.3.1 California Regulatory Framework

Air quality for the VAFB area is regulated under the California Code of Regulations (CCR), Title 17. Under CCR 17-Section 70200, the California Air Resources Board (CARB) has developed ambient air quality standards (Table 3.8-3), which represent the maximum allowable atmospheric concentrations that may occur and still ensure protection of public health. Subchapter 7 of CCR 17-93000 defines toxic air pollutants as well as HAPs. Subchapter 7.5 contains requirements for air-toxics control measures for specific industries. Subchapter 7.6 incorporates the requirements of the Air Toxics "Hot Spots" Information and Assessment Act of 1987. Section 44340 of the Air Toxics "Hot Spots" Information and Assessment regulations requires preparation and submission of a comprehensive emissions inventory plan (USAF, 1998).

The Santa Barbara County Air Pollution Control District (SBCAPCD) also regulates VAFB. SBCAPCD Regulation XIII incorporates the Federal regulation for Operating Permits under Title 40 CFR Part 70. VAFB has entered into an agreement with the U.S. EPA and SBCAPCD as part of the DoD Environmental Investment (ENVVEST) program. As part of this program, VAFB has been exempted from the requirements of Title 40 CFR 70 and therefore from SBCAPCD Regulation XIII. Instead, VAFB has facility-specific operational and reporting requirements (USAF, 1998).

Table 3.8-3 National and California Ambient Air Quality Standards (USAF, 1998)

Pollutant	Averaging Time	California Standards (ug/m³)	National Standards (ug/m³)	
			Primary	Secondary
Ozone	1 Hour	180	235	235
CO	8 Hours	10,000	10,000	----
	1 Hour	23,000	40,000	----
NO_2	Annual	----	100	100[a]
SO_2	Annual	----	80	----
	24 Hours	105	365	----
	3 Hours	----	----	0.5 ppm (1,300 ug/m³)
	1 Hour	655	----	----
PM_{10}	Annual	30	50	50
	24 Hours	50	150	150
Sulfates	24 Hours	25	----	----
Lead	30 Days	1.5	----	----
	Quarterly	----	1.5	1.5
Hydrogen Sulfide	1 Hour	42	----	----
Vinyl Chloride	24 Hours	26	----	----
Visibility-Reducing Particles	8 Hours (10 a.m. to 6 p.m. PST)	In a sufficient amount to produce an extinction coefficient of 0.23 per km		

ug/m³ = micrograms per cubic meter

3.8.3.2 Meteorology

The climate at VAFB is characterized as dry and subtropical. The area experiences moderate seasonal and diurnal variation in temperature and humidity. Temperatures are mild, ranging from 8°C to 30°C (45°F to 85°F) with an annual mean temperature of 13°C (55°F). Temperatures below freezing and above 38°C (100°F) are rare. The rainy season extends from November to April. Annual precipitation is 33 cm (13 in) with the most rain falling during February (6.5 cm) (2.6 in) and the least during July (.025 cm) (0.01 in). The annual relative humidity is 77 percent. The driest periods occur during the fall, when Santa Ana winds can result in humidity as low as 10 percent.

The mean annual wind speed and direction in the area is 12 kilometers per hour (7 mph) out of the northwest. The strongest winds occur during the winter and midday. Calms are rare and the lowest wind speeds occur during the evening and early morning hours. Nighttime and early-morning low clouds and coastal fog characterize the diurnal weather pattern. Cloud cover occurs almost half of

the time. The fog burns off by mid-morning and is replaced by a sea breeze as the land begins to warm. Sea breezes are less frequent during the winter.

Storms and fronts move through the area during the winter, resulting in gusty and rainy conditions. Thunderstorms are relatively infrequent, occurring two or three times each year. The average annual ceiling height for the cloud cover is approximately 305 m (1,000 ft). The entire area experiences a persistent subsidence temperature inversion due to a pacific high-pressure region. The temperature inversion occurs below the 1370-meter level (4,500-ft) and caps the planetary boundary layer. The average maximum daily inversion height over Point Arguello ranges from 490 m (1,600 ft) during the summer to 850 m (2,800 ft) during the winter (USAF, 1998).

3.8.3.3 Regional Air Quality

Air quality in California is assessed on a county and regional basis. VAFB is in Santa Barbara County, which is part of the South Central Coast Air Basin (SCCAB). Both the U. S. Environmental Protection Agency (EPA) and CARB have designated the SCCAB as being in attainment of the NAAQS for SO_X, NO_X, and CO. VAFB has been designated by the EPA to be in attainment with the Federal PM_{10} standard but has been designated by CARB to be in non-attainment with the more stringent California standard for PM_{10}. The EPA has classified Santa Barbara County as being in serious non-attainment for the Federal ozone standard (USAF, 2000a). Table 3.8-4 shows average ambient air concentrations for criteria pollutants as measured at VAFB.

Table 3.8-4 Ambient Air Concentrations for Criteria Pollutants at VAFB (USAF, 2000a)

Pollutant (ug/m3)	Averaging Period	1996	1997	1998
Ozone	1-Hr Highest	190	177	157
Carbon Monoxide	1-Hr Highest	1,603	1,259	1,145
	8-Hr Highest	801	572	1,030
Nitrogen Oxides	1-Hr Highest	58	58	43
	(Annual)	6	6	6
Sulfur Dioxide *	3-Hr Highest	8	10	8
	24-Hr Highest	3	5	3
	Annual	3	3	3
PM_{10}	24-Hr Highest	61	49	32
	Annual	18	21	18

ug/m3 = micrograms per cubic meter
* measured as parts per million

3.8.3.4 Air Emissions

The emissions from all stationary sources at VAFB during 1995 totaled 19.3 metric tons (21.3 tons) of nitrogen oxides, 1.1 metric tons (1.2 tons) of carbon monoxide, 7.0 metric tons (7.7 tons) of sulfur dioxide, 1.9 metric tons (2.1 tons) of PM_{10}, and 3.8 metric tons (4.2 tons) of volatile organic compounds (VOCs) (USAF, 2000a). A baseline launch emissions inventory was created for the selected launch activities at VAFB during 1995. The baseline emissions are for current launch vehicle systems including Atlas II, Delta II, and Titan IV. For the two launches included in the 1995 baseline, an estimated 1.5 metric tons (1.7 tons) of nitrogen oxides and 27.9 metric tons (30.8 tons) of PM_{10} were emitted into the atmosphere below 915 m (3,000 ft) in altitude (USAF, 1998).

3.9 GLOBAL ENVIRONMENT

The atmosphere above 914 m (3000 ft) includes the free troposphere ranging from 2,000 to 10,000 m (6,600 to 32,800 ft) in altitude, the stratosphere extending from 10,000 m (32,800 ft) to 50,000 m (164,000 ft). These boundaries should be taken as approximate annual mean values as the actual level of the boundary between the troposphere and stratosphere (tropopause) is variable on a seasonal and day-to-day basis. Sections 3.8.2.2 and 3.8.3.2 documented that the top of the atmospheric boundary layer and, hence, the bottom of the free troposphere is at 914 m (3000 ft) for CCAFS, KSC, and VAFB.

3.9.1 Troposphere

The upper troposphere ranges from 2,000 m (6,600 ft) to 10,000 m (32,800 ft) and is generally referred to as the free troposphere. This layer is characterized by vigorous mixing driven by convective upwelling, horizontal and vertical wind shears, and mesoscale (tens to hundreds of kilometers or miles) transport and washout of gases that have been introduced into this region by industrial sources. This layer does not contain any uniquely important atmospheric constituents and it does not generally influence air quality in the lower troposphere (i.e., atmospheric boundary layer).

The concentrations of gases and particles emitted into the free troposphere by transient sources such as launch vehicles are quickly diluted to very low levels before they can be deposited onto or transported near the ground by precipitation or strong down-welling events.

3.9.2 Stratosphere

The stratosphere extends from 10,000 m (32,800 ft) to 50,000 m (164,000 ft) and is important because of ozone formed within the stratosphere. The

stratospheric ozone layer is usually taken to lie between about 16,000 m (52,100 ft) and 26,000 m (84,700 ft) altitude. The stratospheric ozone absorbs most of the most harmful ultraviolet (UV) radiation from the sun. Depletion of ozone following the introduction of man-made materials can result in an increase in solar UV on the ground and so pose a serious ecological and health hazard. The importance and global nature of the ozone layer requires a careful consideration of all sources of perturbations.

The concentration (typically parts per million) and distribution of stratospheric ozone is controlled by various chemical reactions, the most important of which are the catalytic reactions involving nitrogen, chlorine, bromine, and hydrogen compounds known as radicals. The importance of these oxides lies in the fact that they destroy ozone molecules without being destroyed themselves. Small (< μm) aerosol particles in the stratosphere (mainly sulfate) also play a role in stratospheric chemistry by providing a surface on which chemical reactions can proceed. Thus even though radicals and particles are present in the unperturbed stratosphere in only relatively small amounts (hundreds to thousands of times less than ozone), they exert a controlling influence on ozone concentrations. Ultimately, this means that relatively small amounts of radicals and particles can sufficiently perturb the stratosphere to cause ecologically substantial ozone loss.

At the present time the ozone layer is characterized by a substantial perturbation caused by the introduction of chlorine and bromine radicals from the photochemical breakdown of man-made halocarbons after they have mixed into the stratosphere. Global ozone loss from halocarbons is thought to be about 4% at the present time (WMO, 1999). Most halocarbon production and use have been banned by international agreement and so the expectation is that the ozone layer would return to normal by about 2050 as the previously released halocarbons are consumed by sunlight and natural processes slowly remove the liberated chlorine and bromine (WMO, 1999).

Sufficiently intense natural events can also cause substantial, though transient, ozone loss. Violent volcanic explosions can inject gases and particles into the stratosphere that reduce ozone. The El Chichon event in 1991, for example, reduced ozone globally by about 1% for approximately 18 months.

Solid and liquid rocket propulsion systems emit a variety of gases and particles directly into the stratosphere (WMO, 1991). A large fraction of these emissions, CO_2 for example, are chemically inert and do not affect ozone levels directly. Other emissions such as HCl and H_2O are not highly reactive but they do have an impact on ozone since these gases participate in chemical reactions that help determine the concentrations of the ozone destroying radical gases. A small fraction of rocket engine emissions are highly reactive radicals. Particulate emissions such as Al_2O_3 (alumina) and carbon (soot) may mimic or enhance the role of natural stratospheric particles by enabling or enhancing ozone-related chemical reactions.

3.10 NOISE

Noise is usually defined as unwanted sound. High-amplitude noise can be unwanted because of potential structural damage. The decibel (dB) is the accepted standard unit for the measurement of sound. It is a logarithmic unit that accounts for the large variations in amplitude. Sound levels that have been adjusted to correspond to the frequency sensitivity of the human ear are referred to as A-weighted sound pressure levels (AWSPL). If structural damage is a concern, then the overall sound pressure level (OSPL) is used. This quantity has no frequency weighting and therefore includes low frequencies that are not audible but can affect structures.

A number of descriptors have been developed that account for changes in noise with time and provide a cumulative measure of noise exposure. The most widely used cumulative measure is the day-night average sound level (DNL). This is a daylong average of the AWSPL, with a 10-dB penalty applied at night. The State of California uses the Community Noise Equivalent Level (CNEL), which is similar to DNL except that a penalty of 5 dB is applied to noise in the evening.

A quantity falling between single-event measures like AWSPL and cumulative measures like DNL is the sound exposure level (SEL), a measure of the total sound from a single event combining the level of the sound with its duration. For a sound with an effective duration of one second, SEL is equal to AWSPL. For sounds with longer effective duration, SEL is larger than AWSPL and thus reflects the greater intrusion of the longer sound.

According to U.S. Occupation Safety and Health Administration (OSHA) noise standards, no worker shall be exposed to noise levels higher than 115 dBA. The exposure level of 115 dBA is limited to 15 minutes or less during an 8-hour work shift. The OSHA standards are the maximum allowable noise levels for the personnel in the vicinity of the launch pad.

The largest portion of the total acoustic energy produced by a launch vehicle is usually contained in the low-frequency end of the spectrum (1 to 100 Hz). Launch vehicles also generate sonic booms. A sonic boom, the shock wave resulting from the displacement of air in supersonic flight, differs from other sounds in that it is impulsive and very brief (up to several seconds for launch vehicles). Because a sonic boom is not generated until the vehicle reaches supersonic speeds, the launch site itself does not experience a sonic boom. The entire boom footprint is some distance downrange of the launch site (USAF, 1998).

3.10.1 CCAFS and KSC

Noise levels around facilities at CCAFS and KSC approximate those of any urban industrial area, reaching levels of 60 to 80 dBA. Additional on-site

sources of noise are the aircraft landing facilities at the CCAFS Skid Strip and the KSC Shuttle Landing Facility. Other less frequent but more intense sources of noise in the region are launches from CCAFS and KSC. Noise from a Delta II launched from LC-17 was measured during a July 1992 launch (MCINERNY, 1993). Table 3.10-1 shows the noise levels measured during the launch and the pre-launch predicted OSPL.

Table 3.10-1 Measured Delta II Sound Levels, July 1992

Distance from Pad (ft/m)	Noise Levels (dB)			
	Predicted Maximum OSPL	Measured Maximum OSPL	Measured Maximum AWSPL	Measured A-weighted SEL
1,500/458	135.4	130.6	120.2	127.5
2,000/610	132.9	130.4	117.7	125.5
3,000/915	129.4	125.8	115.1	123.0

AWSPL = A-weighted sound pressure level
dB = decibel
OSPL = overall sound pressure level
SEL = sound exposure level (A-weighted)
Source: MCINERNY, 1993

The relative isolation of the CCAFS and KSC facilities reduces the potential for noise to affect adjacent communities. The closest residential areas to CCAFS are to the south, in the cities of Cape Canaveral and Cocoa Beach. Expected sound levels in these areas are normally low, with higher levels occurring in industrial areas (Port Canaveral) and along transportation corridors. Residential areas and resorts along the beach would be expected to have low overall noise levels, normally about 45 to 55 dBA. Infrequent aircraft fly-overs and rocket launches from CCAFS and KSC would be expected to increase noise levels for short periods of time. The highest recorded levels are those produced by launches of the Space Shuttle, which in the launch vicinity can exceed 160 dBA. Space Shuttle launch noise at Port Canaveral would be expected to be typical of those at an industrial facility, reaching levels of 60 to 80 dBA (USAF, 1998).

Sonic booms produced during vehicle ascent occur over the Atlantic Ocean and are directed in front of the vehicle and do not impact land areas. Peak overpressures from large vehicles such as the Titan IVB approach 49 kg/m^2 (10 lb/ft^2) in focal zones (USAF, 1998).

3.10.2 VAFB

Noise levels measured on North VAFB are generally typical of levels in urban areas with little industrialization. Noise levels on South VAFB would be expected to be similar to levels found in rural areas, except around active launch complexes, where noise levels during operations may be similar to those at an industrial site. An additional source of noise in the area is the VAFB Airfield, which follows State regulations concerning noise and maintains a CNEL equivalent to 65 dBA or lower for off-base areas (USAF, 1998).

Other less frequent, but more intense, sources of noise in the region are rocket launches from VAFB. Table 3.10-2 shows the maximum noise levels measured at five locations during the launch of a Titan IVA from SLC-4. Of particular interest are the measurements at the 13,150 m distance (43,129 ft) in Lompoc: AWSPL was 88.0 dB, A-weighted SEL was 93.7 dB, and OSPL was 112.8 dB (USAF, 1998).

Table 3.10-2 Measured Titan IV Sound Levels, August 1993

Distance from Pad (feet/m)	Noise Levels (dB)			
	Measured Maximum OSPL	SLM Measured Maximum OSPL	Measured Maximum AWSPL	Measured A-weighted SEL
2,700/823	141.7	141.0	124.4	133.0
6,680/2036	131.4	----	112.4	121.9
11,200/3414	129.0	129.9	110.6	116.2
19,000/5791	122.1	127.6	99.0	109.0
43,129/13146(a)	112.8	----	88.0	93.7

Note: (a) in city of Lompoc
AWSPL = A-weighted sound pressure level
dB = decibel
OSPL = overall sound pressure level
SEL = sound exposure level (A-weighted)
SLM = sound level meter
Source: DO, 1994

The area immediately surrounding VAFB is mainly undeveloped and rural. Sound levels measured for most of the region are normally low, with higher levels appearing in industrial areas and along transportation corridors. Rural areas in the Lompoc and Santa Maria valleys would be expected to have low overall CNEL levels, normally about 40 to 45 dBA. Infrequent aircraft fly-overs and rocket launches from VAFB would be expected to increase noise levels for short periods of time. The maximum sonic boom overpressure for the Titan IVB was calculated and measured to be about 49 kg/m^2 (10 psf). Sonic boom effects on human population centers have been minor because most launch azimuths at VAFB are over the Pacific Ocean (USAF, 1998).

3.11 ORBITAL DEBRIS

This section addresses the potential hazards and environmental impacts associated with man-made orbital debris. Orbital debris is a concern as a potential collision hazard to spacecraft. Large pieces of debris are of concern with respect to re-entry and eventual Earth impact. Space debris can be classified as either natural or man-made objects. The measured amount of man-made debris equals or exceeds that of natural meteoroids at most low-Earth orbit altitudes [i.e., below 2,000 km (1,243 mi)]. Man-made debris consists of material left in Earth orbit from the launch, deployment, and

deactivation of spacecraft. It exists at all inclinations and primarily at LEO altitudes of approximately 800 to 1000 km (500 to 625 mi) (UN, 1999). Orbital debris moves in many different orbits and directions, at velocities ranging from 3 to over 75 km/s (1.9 to over 47 mi/s) relative to Earth (USAF, 2001). Although space debris is not explicitly mentioned in any U.S. legislation, an Executive Branch policy directive, National Space Policy (September 19, 1996), identifies the following guidance to support major U.S. space policy objectives:

> The United States will seek to minimize the creation of space debris. NASA, the Intelligence Community, and the DoD, in cooperation with the private sector, will develop design guidelines for future government procurements of spacecraft, launch vehicles, and services. The design and operation of space tests, experiments and systems, will minimize or reduce accumulation of space debris consistent with mission requirements and cost effectiveness.

3.11.1 Characteristics of Orbital Debris

It is estimated that there are more than 10,000 objects greater than 10 cm (4 inches) in size in orbit, tens of millions between 0.1 and 10 cm (0.039 and 4 inches) in size in orbit, and trillions less than 0.1 cm (0.039 inch) in size in orbit (OSTP, 1995). Most cataloged orbital debris occurs in LEO because most space activity has occurred at those altitudes. LEO occurs at altitudes less than 2,000 km (1,243 mi). The quantity of orbital debris has been growing at a roughly linear rate, and growth is projected to continue into the future (USAF, 1998).

Orbiting objects lose energy through friction with the upper reaches of the atmosphere and various other orbit-perturbing forces. Over time, the object falls into progressively lower orbits and eventually falls to Earth. Once the object enters the measurable atmosphere, atmospheric drag would slow it down rapidly and cause it either to burn up or de-orbit and fall to Earth. Satellites with circular orbital altitudes of less than 400 kilometers (248 miles) may re-enter the atmosphere within a few months, whereas satellites with orbital altitudes greater than 900 kilometers (559 miles) may have lifetimes of 500 years or more (OSTP, 1995).

3.11.2 Hazards to Space Operations from Orbital Debris

The effects of launch-vehicle-generated orbital debris impacts on other spacecraft depend on the altitude, orbit, velocity, angle of impact, and mass of the debris. Debris less than about 0.01 cm (0.004 inch) in diameter can cause surface pitting and erosion. Long-term exposure of payloads to such particles is likely to cause erosion of exterior surfaces and chemical contamination, and may degrade operations of vulnerable components. Debris between 0.01 and 1.0 cm (0.004 and 0.4 inch) in diameter would produce significant impact

damage that can be serious. Objects larger than 1.0 cm (0.4 inch) in diameter can produce catastrophic damage (OSTP, 1995).

3.12 BIOLOGICAL RESOURCES

Biological resources include the native and introduced plants and animals within the area potentially affected by the proposed activity. These are divided into vegetation, wildlife, threatened or endangered species, and sensitive habitats. Sensitive habitats include wetlands, plant communities that are unusual or of limited distribution, and important seasonal use areas for wildlife. They also include critical habitat as protected by the Endangered Species Act and sensitive ecological areas as designated by State or Federal rulings.

3.12.1 CCAFS and KSC

CCAFS and KSC occupy a combined total of about 62,753 hectares (155,000 acres) of coastal habitat on a barrier island complex that parallels Florida's mid-Atlantic coast. The area of interest for biological resources consists of CCAFS and KSC, the adjacent Atlantic Ocean, and three major inland water bodies (the Banana and Indian rivers and Mosquito Lagoon).

3.12.1.1 Vegetation

CCAFS and KSC support numerous ecologically significant upland and wetland communities. Upland communities include coastal dunes, coastal strand, oak scrub, palmetto scrub, slash pine flatlands, cabbage palm hammock, oak-cabbage palm hammock, and xeric hammock. Wetland communities include non-saline wetlands, hardwood swamp, willow swamp, freshwater swale swamp, cattail marsh, cabbage palm savanna, brackish or saline wetlands, sand cordgrass/black rush, mixed salt-tolerant grasses marsh, sea oxeye, saltwort-glasswort, saltmarsh cordgrass, and mangrove (NASA, 1997a).

3.12.1.2 Wildlife

The coastal scrub and associated woodlands provide habitat for mammals including the white-tailed deer, armadillo, bobcat, feral hog, raccoon, long-tailed weasel, round-tailed muskrat, and the Florida mouse (a State species of special concern). At CCAFS and KSC, the resident and the migrating bird species include numerous common land and shore birds.

Amphibians observed at CCAFS and KSC include the spade-foot and eastern narrow-mouth toads, squirrel and southern leopard frogs, and green tree frogs. Reptiles observed include the American alligator, the Florida box turtle, the gopher tortoise, the Florida softshell, the green anole, the six-lined racerunner,

the broadhead skink, the southern ringneck snake, the everglades racer, the eastern coachwhip, and the mangrove salt marsh snake.

Numerous marine mammals populate the coastal and lagoon waters including the bottlenose dolphin, the spotted dolphin, and the manatee. The seagrass beds in the northern Indian River system provide important nursery areas, shelter, and foraging habitat for a wide variety of fish and invertebrates, and for manatees. The inland rivers and lagoons provide habitat for marine worms, mollusks, and crustaceans. The Mosquito Lagoon is an important shrimp nursery area.

A number of saltwater fish species can be found within the Indian and Banana River systems including the bay anchovy, pipefish, goby, silver perch, lined sole, spotted sea trout, and oyster toadfish. The small freshwater habitats found on CCAFS and KSC contain bluegill, garfish, largemouth bass, killifishes, sailfin molly, and top minnow (USAF, 1998).

3.12.1.3 Threatened and Endangered Species

CCAFS contains habitat utilized by a large number of Federally and State-listed species. Listed species that are known to be present or near the station boundaries are presented in Table 3.12-1.

Table 3.12-1 Threatened, Endangered, and Candidate Species Occurring or Potentially Occurring at CCAFS, Florida (AEROSPACE, 2000b)

Common Name	Scientific Name	Federal Status	State Status
PLANTS			
Giant leatherfern	Acrostichum danaeifolium	-	T
Curtiss' milkweed	Asclepias curtissii	-	E
Satin-leaf	Chrysophyllum olivaeforme	-	E
Coastal vervain	Glandulareia maritima	-	E
Nodding pinweed	Lechea cernua	-	T
Hand fern	Ophioglossum palmatum	-	E
Golden polypody	Phlebodium aurea	-	T
Beach-star	Remirea maritima	-	E
Nakedwood	Myciantes fragrans	-	T
Sand dune spurge	Chamaesyce cumulicola	-	E
Inkberry	Scaevola plumieri	-	T
Sea lavender	Tournefortia gnaphalodes	-	E
Reptiles and Amphibians			
Gopher frog	Rana capito	-	SSC
American alligator	Alligator mississippiensis	T(S/A)	T(S/A)
Eastern Indigo snake	Drymarchon corais couperi	T	T
Green sea turtle	Chelonia mydas	E	E
Loggerhead sea turtle	Caretta caretta	T	T
Leatherback sea turtle	Dermochelys coriacea	E	E
Atlantic (Kemp's) Ridley sea turtle	Lepidochelys kempi	E	E
Hawksbill sea turtle	Eretmochelys imbricata imbricata	E	E
Florida scrub lizard	Sceloporus woodi	C2	-
Florida pine snake	Pituophis melanoleucus mugitus	-	SSC
Gopher tortoise	Gopherus polyphemus	-	T
Atlantic salt marsh snake	Nerodia clarkii taenaita	T	T
BIRDS			
Wood stork	Mycteria americana	E	E
Bald eagle	Haliaeetus leucocephalus	T	T
Peregrine falcon	Falco peregrinus	E(S/A)	E
Florida scrub jay	Aphelocoma coerulescens	T	T
Piping plover	Charadrius melodus	T	T
Least tern	Sterna antillarum	-	T
Southeastern American kestrel	Falco sparverius paulus	-	T
Burrowing Owl	Athene cunicularia	-	SSC
Roseate spoonbill	Ajaia ajaja	-	SSC
Southeastern snowy plover	Charadrius alexandriainus tenuirostris	C2	T
Osprey	Pandion haliaetus	-	SSC
American Oystercatcher	Haematopus palliatus	-	SSC
Brown Pelican	Pelecanus occidentalis	-	SSC
Snowy egret	Egretta thula	-	SSC
Little blue heron	Egretta caerulea	-	SSC
Tricolored heron	Egretta tricolor	-	SSC

Reddish egret	Egretta rufescens	-	SSC
White Ibis	Eudocimus albus	-	SSC
Black skimmer	Rynchops niger	-	SSC
Roseate tern	Sterna dougallii dougallii	T	T
MAMMALS			
West Indian manatee	Trichechus manatus latirostris	E	E
Southeastern beach mouse	Peromyscus polionotus niveiventris	T	T
Finback whale	Balaenoptera physalus	E	E
Humpback whale	Megaptera novaeangliae	E	E
Northern right whale	Eubalaena glacialis	E	E
Sei whale	Baeaenoptera borealis	E	E
Sperm whale	Physeter catodon	E	E
Florida mouse	Podomys floridanus	-	SSC

C = candidate (former Category C1)
C2 = former Category 2
E = endangered
SSC = State species of special concern
(S/A) = listed by similarity of appearance to a listed species
T = threatened

3.12.1.4 Sensitive Habitats

Sensitive habitats on CCAFS and KSC include wetlands, critical habitats for threatened and endangered species as defined by the Endangered Species Act, and the nearby Canaveral National Seashore and Merritt Island National Wildlife Refuge. This refuge (a part of KSC) contains a large manatee aggregation site that attracts up to 200 manatees in the spring. Threatened or endangered species that inhabit the scrubby flatwoods of Merritt Island include the Florida scrub jay, the eastern indigo snake, and the southern bald eagle. Manatee critical habitat, located in the Banana River system, includes the entire inland sections of the Indian and Banana rivers, and most of the waterways between the two rivers. The NMFS is proposing to designate the water adjacent to the coast of Florida as critical habitat for the northern right whale.

The Indian River Lagoon area (Indian River, Banana River, and Mosquito Lagoon) is home to more than 4,300 kinds of plants and animals. The lagoon has a gradation of brackish water to salt water where it opens to the ocean. It is listed as an Estuary of National Significance and contains more species than any other estuary in North America (2,965 animals, 1,350 plants, 700 fish, and 310 birds). It also provides important migratory bird habitat. The lagoon contains one of the highest densities of nesting turtles in the western hemisphere, is a rich fishery, and is used by up to one third of the United States' manatee population (USAF, 1998).

3.12.2 VAFB

The area of interest for biological resources consists of VAFB, the adjacent Pacific Ocean, and the northern Channel Islands.

3.12.2.1 Vegetation

VAFB occupies a transition zone between the cool, moist conditions of northern California and the semi-desert conditions of southern California. Many plant species and plant communities reach their southern or northern limits in this area. Natural vegetation types on VAFB include southern foredunes; southern coastal, central dune, central coastal, and Venturan coastal sage scrub; and chaparral including central maritime chaparral. Also found are coast live oak woodland and savanna; grassland; tanbark oak and southern bishop pine forest; and wetland communities including coastal salt marsh and freshwater marsh, riparian forests, scrub, and vernal pools (USAF, 1998)

3.12.2.2 Wildlife

Terrestrial animal life consists of species common to coastal sage scrub, grassland, and chaparral communities. Common mammalian species occurring at VAFB include mule deer, coyote, bobcat, jackrabbit, cottontail, skunk, ground squirrel, and numerous nocturnal rodents. South VAFB provides high-quality foraging habitat for wide-ranging carnivores like mountain lion, bobcat, black bear, badger, gray fox, and coyote, in addition to several regionally rare or declining hawks and owls. The region contains a diversity of bird species, such as red-tailed hawks, American kestrels, white-tailed kites, and numerous common land birds. Shore birds are abundant on all sandy beaches. California brown pelicans and the California least tern occur at several locations along the coast. Brown pelicans do not breed on VAFB, but are transient visitors to the coast [SLC2W 1993]. The western snowy plover is considered a year-round resident of VAFB (SCHMALZER, 1998).

An abundance and diversity of marine birds is found along the offshore waters and Channel Islands. The open ocean water along the continental shelf is known to harbor as many as 30 species of seabirds. The Channel Islands host breeding colonies of marine birds. California's only nesting colony of brown pelicans occurs on Anacapa Island and at an islet adjacent to Santa Cruz Island (USAF, 1992).

Harbor seals haul out at a total of 19 sites on VAFB between Point Sal and Jalama Beach. California sea lions do not breed on VAFB, but do use Point Sal as a haul-out site. Northern elephant seals are periodically observed on VAFB. San Miguel and San Nicolas islands are major rookeries for California sea lions

and northern elephant seals. Small-toothed whales including bottlenose, common, and Pacific white-sided dolphins, and killer whales are common near VAFB and in the Channel Islands. The gray whale is found close to shore off VAFB during migration. Minke whales have been reported within a few miles of the leeward sides of San Miguel, Santa Rosa, Santa Cruz, and Anacapa islands.

As required by Section 101(a)(5)(A) of the Marine Mammal Protection Act of 1972 (as amended), the NMFS approved a letter of authorization for the incidental take of marine mammals during programmatic operations at VAFB. The 1997 permit allows incidental take for up to 20 space launches per year for a period of five years. Another request for incidental take will be submitted in 2002 to cover the next five-year period.

3.12.2.3 Threatened and Endangered Species

A number of threatened and endangered species is known or expected to occur on VAFB and in the adjacent offshore waters. Table 3.12-2 lists all of the Federally and State-listed threatened and endangered species, and species of concern that are known to occur or that may potentially occur in the VAFB area.

Table 3.12-2 Threatened, Endangered, and Species of Concern Occurring or Potentially Occurring at VAFB, California (AEROSPACE, 2000a)

Common Name	Scientific Name	Federal Status	State Status
Plants			
Beach layia	Layia carnosa	E	E
Gambel's watercress	Rorippa gambell	E	T
Seaside's bird's beak	Cordylanthus rigidus ssp. Littoralis	SC	E
Lompoc yerba santa	Eriodictyon capitatum	E	-
Beach spectaclepod	Dithyrea maritima	SC	T
La Graciosa thistle	Cirsium loncholepis	C	T
Surf thistle	Cirsium rhothophilum	SC	T
Gaviota tarplant	Hemizonia increscens ssp villosa	PE	E
Black flowered figwort	Scrophularia atrata	SC	-
Aphanisma	Aphanisma blitoides	SC	-
Shagbark manzanita	Arctostaphylos rudis	SC	-
Straight-awned spineflower	Chorizanthe rectispina	SC	-
Dune larkspur	Delphinium parryi ssp blochmaniae	SC	-
Blochman's dudleya	Dudleya blochmaniae ssp blochmaniae	SC	-
Kellog's horkelia	Horkelia cuneata ssp sericea	SC	-
Crisp monardella	Monardella crispa	SC	-
San Luis Obispo monardella	Monardella frutescens	SC	-
Fish			
Unarmored threespine stickleback	Gasterostreus aculeatus williamsonii	E	E
Tidewater goby	Eucyclogobius newberryi	E	SC
Steelhead trout	Oncorhynchus mykiss irideus	E	SC
Arroyo Chub	Gila orcutti	S	SC
Reptiles and Amphibians			
California red-legged frog	Rana aurora draytonii	T	SC
Green sea turtle	Chelonia mydas	T	-
Loggerhead sea turtle	Caretta caretta	T	-
Pacific Ridley sea turtle	Lepidochelys olivacea	T	-
Leatherback sea turtle	Dermochelys coriacea	E	-
Western spadefoot toad	Spea hammodnii	SC	SC
Southwestern pond turtle	Clemmys marmorata pallida	SC	SC
Silvery legless lizard	Anniella pulchra pulchra	SC	SC
California horned lizard	Phyrnosoma coronatum frontale	SC	SC
Two-striped garter snake	Thamnophis hammondii	SC	SC
Birds			
California brown pelican	Pelacanus occidentalis californicus	E	E
Bald eagle	Haliaeetus leucocephalus	T	E
American peregrine falcon	Falco peregrinus anatum	FD	E
California black rail	Laterallus jamaicensis coturniculus	-	T
Western snowy plover	Charadrius alexandrinus nivosus	T	CSC
California least tern	Sterna antillarum browni	E	E
Western yellow-billed cuckoo	Coccyzus americanus occidentalis	-	E

Southwestern willow flycatcher	Empidonax traillii extimus	E	-
Least Bell's vireo	Vireo bellii pusillus	E	E
Belding's savannah sparrow(a)	Passerculus sandwichensis beldingi	-	E
Mountain plover	Charadrius montanus	PT	SC
American bittern	Botaurus lentiginosus	MC	-
Western least bittern	Ixobrychus exilis hesperis	MC	SC
Ferruginous hawk	Buteo regalis	MC	SC
White-tailed kite	Elanus leucurus	MC	-
Elegant tern	Sterna elegans	MC	SC
Short-eared owl	Asio flammeus	MC	SC
Burrowing owl	Athene cunicularia hypugea	MC	SC
Black swift	Cypseloides niger	MC	SC
Olive-sided flycatcher	Contopurs borealis	MC	-
Little willow flycatcher	Empidonax trailii extimus	SC	E
Loggerhead shrike	Lanius ludovicianus	MC	SC
Tri-colored blackbird	Agelaius tricolor	MC	SC
Grasshopper sparrow	Ammodramus savannarum	MC	-
Bell's sage sparrow	Amphispiza belli belli	MC	SC
Lawrence's goldfinch	Carduelis lawrencei	MC	-
Golden eagle	Aquila chrysaetos	P	SC
Mammals			
Guadalupe fur seal	Arctocephalus townsendi	T	T
Steller sea lion	Eumetopias jubatus	T	-
Southern sea otter	Enhydra lutris nereis	T	P
Sei whale	Balaenoptera borealis	E	-
Blue whale	Balaenoptera musculus	E	-
Finback whale	Balaenoptera physalus	E	-
Humpback whale	Megaptera novaeangliae	E	-
Right whale	Balaena glacialis	E	-
Sperm whale	Physeter catodon	E	-
Pacific harbor seal	Phoca vitulina richardii	P	-
Townsend's western big-eared bat	Plecotus townsendii townsendii	SC	SC
Pallid bat	Antrozous pallidus	S	SC
Yuma myotis	Myotis yumanensis	SC	SC
Fringed myotis	Myotis thysanodes	SC	SC
Long-eared myotis	Myotis evotis	SC	-
Long-legged myotis	Myotis volans	SC	SC
Small-footed myotis	Myotis ciliolabrum	SC	-
Western mastiff bat	Eumops perotis	SC	SC
Insects			
White sand bear scarab beetle	Lichnanthe albipilosa	SC	-
Morro Bay blue butterfly	Icaricia icarioides moroensis	SC	-

Note:
(a) Taxonomic status of subspecies is pending.
E = endangered
SC= species of concern
T = threatened
PT = proposed threatened
FD = Federally delisted
C = candidate (former Category C1)
R = rare (State designation)
MC = management concern
P = protected
S = sensitive

3.12.2.4 Sensitive Habitats

Designated sensitive habitats on VAFB include butterfly trees, marine mammal hauling grounds, seabird nesting and roosting areas, white-tailed kite habitat, Burton Mesa chaparral, and wetlands including streams/riparian woodlands. The Monarch butterfly is a regionally rare and declining insect known to winter in eucalyptus and cypress groves on VAFB. These trees are protected as a monarch wintering habitat. The VAFB coastline between Oil Well Canyon and Point Pedernales is designated as a marine ecological reserve. This includes a beach area south of Rocky Point used by harbor seals as haul-out and pupping areas. Foraging habitat for white-tailed kites includes grassland and open coastal sage scrub. The Santa Ynez River, San Antonio Creek, and Cañada Honda Creek watersheds provide substantial habitat for many wildlife species and for listed fish species. Burton Mesa chaparral is considered a regionally rare and declining plant community with a highly localized occurrence (USAF, 1998).

3.13 HISTORICAL/CULTURAL RESOURCES

Cultural resources include prehistoric and historic sites, structures, districts, artifacts, or any other physical evidence of human activity considered important to a culture or community for scientific, traditional, religious, or any other reasons. The primary laws that pertain to the treatment of cultural resources during environmental analysis are the National Historic Preservation Act (NHPA), the Archaeological Resources Protection Act (ARPA), the American Indian Religious Freedom Act (AIRFA), and the Native American Graves Protection and Repatriation Act (NAGPRA). Only those cultural resources determined to be potentially significant are subject to protection. To be considered significant, a cultural resource must meet one or more of the criteria established by the National Park Service that would make that resource eligible for inclusion in the National Register of Historic Places (NRHP) (USAF, 1998).

3.13.1 CCAFS and KSC

Human occupation of the CCAFS and KSC area first occurred approximately 4,000 years ago. There is archaeological evidence that the entire area was exploited for a wide variety of marine, estuarine, and terrestrial resources. European exploration of the Florida coast began in the 15th century. The area remained sparsely populated until 1843 when a lighthouse was established. Maritime activities increased during the early 1900s, and additional homesteads and roads were established. The U.S. government began purchasing land for the establishment of a long-range proving ground and missile test center in the late 1940s. (USAF, 1998)

Sixteen archaeological sites have been identified on CCAFS, eleven of which have been determined eligible for listing in the National Register of Historic Places (NRHP) but have not currently been listed. Of these, five are burial mounds with a settler's cemetery associated with one mound. The remaining five sites have been determined to be ineligible for listing. Additionally, there are five historic sites of which two are cemeteries of the early settlers; these are not protected under current legislation but are monitored as historically significant. (Aerospace, 2002a)

Also, there are seven CCAFS sites listed as National Historic Landmarks (NHL). Four are launch complexes, one is just the Mobile Service Tower at LC 13, and two are NASA property and, therefore, not under the jurisdiction of the 45th Space Wing. In addition, eight other sites are eligible for NHL listing, including six launch complexes, Hangar C, and the Cape Lighthouse. (Aerospace, 2002a)

3.13.2 VAFB

Human occupation of the area first occurred approximately 9,000 years ago and over 2,000 prehistoric and historic archaeological sites have been recorded on VAFB. Prehistoric site types include dense shell middens, scatters of stone tools and debris, concentrations of ground stone milling tools, village sites, stone quarries, and temporary encampments. At the time of European contact, peoples speaking one of the languages of the Chumashan branch of the Hokan language family populated the VAFB area. There are numerous traditional resources sites associated with the Chumash at VAFB including prehistoric villages and campsites, rock art panels, burial sites, resource gathering areas, trails, and wetlands. (USAF, 1998)

Fossils found in the vicinity of VAFB include remains of both vertebrate and invertebrate animals. Remnants of Pleistocene Epoch (2 million to 8,000 years ago) terraces are found on South VAFB. Fossil remains found in this area include mammoth and horse fossils approximately 45,000 years old. (USAF, 1998)

The number of cultural resources of all types total 2556 at VAFB. The 2556 resources include the following types: 2215 prehistoric and historic archaeological sites; 72 cold war structures/buildings [all eligible for listing in National Register of Historic Places (NRHP)]; 110 early historical structures and ruins; 141 native American traditional and heritage sites; and 18 historic roads, trails, and landscapes. There is one National Historic Landmark (Space Launch Complex 10 with seven individual buildings and structures). There is one National Historic Trail (the Anza Trail associated with Spanish Exploration and Settlement). Out of the 2556 cultural resouces, there are 260 sites that have been determined to be eligible for listing in the NRHP. Out of the 2556 cultural resources, there are only 22 that have been determined ineligible for listing in NRHP. (Aerospace, 2002b)

3.14 ENVIRONMENTAL JUSTICE

Executive Order EO 12898, Environmental Justice, was issued on February 11, 1994. Objectives of EO 12898 include development of Federal agency implementation strategies, identification of minority and low-income populations where proposed Federal actions have disproportionately high and adverse human health and environmental effects, and participation of minority and low-income populations. Accompanying EO 12898 was a Presidential Transmittal Memorandum that referenced existing Federal statutes and regulations to be used in conjunction with EO 12898. The memorandum addressed the use of the policies and procedures of the NEPA. Specifically, the memorandum indicates that, "Each Federal agency shall analyze the environmental effects, including human health, economic and social effects, of Federal actions, including effects on minority communities and low-income communities, when such analysis is required by the NEPA 42 U.S.C. Section 4321, et seq."

3.14.1 CCAFS and KSC

Based upon the 2000 Census of Population and Housing, Brevard County had a population of 476,230 persons. Of this total, 63,339 persons (13.3 percent) were minority and 53,814 persons (11.3 percent) were low-income as defined by U.S. Census Bureau criteria.

3.14.2 VAFB

Based upon the 2000 Census of Population and Housing, Santa Barbara County had a population of 399,347 persons. Of this total, 109,022 persons (27.3 percent) were minority and 58,305 persons (14.6 percent) were low-income as defined by U.S. Census Bureau criteria.

4 CHAPTER FOUR – ENVIRONMENTAL CONSEQUENCES OF ALTERNATIVES

This chapter describes the environmental impacts of the proposed action and the no-action alternative. Briefly, the proposed action and the no-action alternative both include the preparation, processing, testing, assembly, final launch preparations, and launch of payloads over the period 2002 to 2012. Payloads covered by this FEA are considered to be routine in that their characteristics fall within the Envelope Payload Characteristics (EPCs) listed in Table 2.1-4, and they present no new or substantial environmental impacts or hazards. Launches of such routine payload spacecraft are covered by this FEA only if they use launch vehicles listed in Table 2.2-1 and occur from existing launch facilities at CCAFS or VAFB (section 2.1.4). Such launches would be scheduled in the normal course of U. S. Air Force and NASA manifesting. For the no-action alternative, NASA would not launch scientific spacecraft missions defined as routine payloads using the specific criteria and thresholds described in this FEA. NASA would then propose spacecraft missions for individualized review under the National Environmental Policy Act (NEPA). Duplicate analyses and redundant documentation would not present any new information or identify any substantially different environmental impacts.

NEPA documentation for all launch vehicle operations at CCAFS and VAFB has been previously completed for all routine payload candidate launch vehicles. See Appendix A for a list of applicable NEPA documents. Existing permits and approvals applicable to KSC, CCAFS, and VAFB cover pre-launch processing of proposed NASA payloads falling within the envelope of characteristics defined in this FEA. Applicable permits are on file with the Environmental Managers at each facility. The remainder of this chapter describes the potential environmental impacts of spacecraft activities: payload processing, nominal launches, and launch failures.

4.1 IMPACTS OF PROPOSED ACTION

This chapter includes a summary of launch vehicle impacts and a detailed discussion of impacts of spacecraft activities. Launch vehicle impacts from launches and at launch sites covered by this FEA have been analyzed in previous NEPA documents. See summary below and list of referenced NEPA documents in Appendix A. The remainder of the chapter concentrates on the potential environmental impacts of spacecraft activities, using as a starting point those launch vehicles with the greatest potential for adverse environmental impact. These example launch vehicles include the following: the Atlas V (largest solids from CCAFS), Delta IV (largest solids from VAFB), Delta II 2925

(largest hypergolic propellant load from CCAFS), and Titan II (largest hypergolic propellant load from VAFB). As indicated parenthetically in the previous sentence, these example launch vehicles were selected based on the types and quantities of propellants used by each vehicle at each launch range. The remaining candidate launch vehicles are discussed in Section 2.1.3 and have a lesser potential to cause environmental impact or hazard due to the use of lesser quantities of propellants than the example launch vehicles.

4.1.1 Hazardous Materials and Hazardous Waste

As described in Section 3.4, hazardous materials and hazardous wastes are controlled in accordance with Federal and State regulations. CCAFS, KSC, and VAFB have established plans to implement these regulations, and those plans were documented in Section 3.4. Responsibilities and procedures for management of hazardous materials and hazardous wastes are clearly defined in those operating plans. On-site and off-site payload processing facilities must prepare and retain a written contingency plan and emergency procedures for responding to emergencies involving hazardous materials. As detailed in Section 3.4, CCAFS, KSC, and VAFB have active pollution prevention programs to reduce the use of hazardous materials and generation of hazardous waste.

4.1.1.1 Spacecraft Processing Use of Hazardous Materials

The approximate quantities of materials that would be used during processing of a routine payload spacecraft are listed in Table 4.1-1. Any materials remaining after completion of processing would be properly stored for future use or disposed of in accordance with all applicable regulations.

Table 4.1-1 Payload Processing Materials of a Routine Payload Spacecraft

Material	Quantity	Purpose
Isopropyl Alcohol	22.7 liter (5 gal)	Wash
Denatured Alcohol	22.7 liter (5 gal)	Wash
Ink, White	0.5 liter (1pt)	Marking
Ink, Black	0.5 liter (1 pt)	Marking
Epoxy adhesive	4.5 liter (1 gal)	Part bonding
Epoxy, Resin	4.5 liter (1 gal)	Repairs
Acetone	4.5 liter (1 gal)	Epoxy cleanup
Paint, Enamel	4.5 liter (1 gal)	Repair & marking
Paint, Lacquer	4.5 liter (1 gal)	Repair & marking
Mineral Spirits	4.5 liter (1 gal)	Enamel thinner
Lacquer Thinner	4.5 liter (1 gal)	Thinning lacquer
Lubricant, Synthetic	0.5 liter (1 pt)	Mechanism lube
Flux, Solder, MA	0.5 liter (1 pt)	Electronics
Flux, Solder, RA	0.5 liter (1 pt)	Electronics
Chromate conversion coating	0.5 liter (1 pt)	Metal Passivation

Source: NASA, 1998

To these processing materials, routine payload spacecraft may also incorporate structural materials that present a minor hazard in certain circumstances. For example, beryllium metal in powder form has been identified as a respiratory carcinogen. Beryllium is used in optical mirrors and windows as well as in structural components. Beryllium would only become a hazard if it becomes airborne in fine particles as a result of drilling, sanding, or other modification of these parts at the launch site. The use of approved respiratory protection and the careful removal and containment of residue would mitigate this hazard. There are no plans for modification of any components of routine payload spacecraft at the launch site. In the unlikely event of a launch accident, the anticipated maximum temperature of burning solid propellants, 3,044 K (2,770 C or 5,019 F), is lower than the boiling temperature, 3,243 K (2970 C or 5378 F), of Beryllium metal. There is an even lower likelihood, in an accident scenario, that burning solid propellant pieces would come into direct contact with Beryllium metal or remain in direct contact long enough to transfer sufficient heat to boil Beryllium metal. Vaporization of Beryllium would be highly improbable. In the case of spacecraft reentry, wherein the metal is eroded into small particles that enter the atmosphere, the potential hazard is mitigated by dilution since the particles would be dispersed throughout the Earth's atmosphere before any particles would reach ground.

Liquid hypergolic propellants make up the largest proportion of hazardous materials used in processing NASA routine payload spacecraft. A maximum of 1000 kg (2200 lb) of hydrazine (N_2H_4), 1000 kg (2200 lb) of monomethylhydrazine (MMH), and 1200 kg (2640 lb) of nitrogen tetroxide (NTO) could be loaded onto routine payload spacecraft. An additional quantity of each propellant could be present at the processing facility. As described in Sections 3.5 and 4.1.2.1.1, these propellants are extremely hazardous and toxic. They

are transported and controlled by the base propellant contractor. They are not stored at the payload processing facilities. Each facility that is permitted to process hypergolic propellant transfers is configured to manage hypergolic propellants and waste products.

4.1.1.2 Spacecraft Processing Hazardous Waste Production

The hazardous materials used to process routine payload spacecraft could potentially generate hazardous waste. The spacecraft contractor would be responsible for identifying, containing, labeling, and accumulating the hazardous wastes in accordance with all applicable Federal, State, and local regulations. These regulations are described in Section 3.4. All hazardous wastes generated from spacecraft processing would be transported, treated, stored and disposed by the responsible base contractor.

Table 4.1-2 presents the annual estimated hazardous waste amounts produced by the processing of two U.S. Air Force DSCS satellites at CCAFS. The U.S. Air Force DSCS satellite was selected as an example because it is typical of payloads within the scope of the routine payload spacecraft FEA.

Table 4.1-2 Annual Hazardous Wastes Associated with Payload Processing (USAF, 1995c)

Waste Description	Estimated Volume of Waste (kg/yr)[a]
Liquid Hazardous Wastes	
Potable water rinsate of hydrazine transfer equipment	417 (917 lb/yr)
IPA and demineralized water rinsate of hydrazine transfer equipment	417 (917 lb/yr)
Potable water rinsate of MMH transfer equipment	417 (917 lb/yr)
IPA and demineralized water rinsate of MMH transfer equipment	417 (917 lb/yr)
Potable water rinsate of NTO transfer equipment	417 (917 lb/yr)
Sodium hydroxide (oxidizer scrubber solution)	2841 (6,251 lb/yr) b
Hydrazine and MMH mixture collected from liquid separator on scrubber	50 (110 lb/yr) c
Solid Hazardous Wastes	
Pads, wipes, and other solids contacting hydrazine	25 (56 lb)
Pads, wipes, and other solids contacting MMH	25 (56 lb)
Pads, wipes, and other solids contacting NTO	25 (56 lb)
Total Exclusive of Scrubber Solution and Reclaimed Propellant	2160 (4753 lb)

a) Refers to amounts associated with the processing of two U.S. Air Force DSCS satellites.
b) Sodium hydroxide scrubber solution will actually be changed approximately once every 5-10 years. The amount presented reflects the total amount that will be wasted when the solution is changed. This amount is not included in the annual hazardous waste total used for comparison with the baseline hazardous waste generated annually at CCAFS.
c) The hydrazine and MMH is reclaimed and not included in the annual hazardous waste total used for comparison with the baseline hazardous waste generated annually at CCAFS.
d) Isopropyl alcohol (IPA), monomethylhydrazine (MMH), and nitrogen tetroxide (NTO) are abbreviated in the table.

Liquid wastes would be generated almost exclusively from fuel and oxidizer transfer operations. Separate propellant transfer equipment is used for each of the two fuels (N_2H_4 and MMH) and the one oxidizer (NTO). After loading

hydrazine into the satellite, transfer equipment and lines would be flushed first with potable water and then with an isopropyl alcohol (IPA) and demineralized water mixture. After MMH has been loaded, equipment and lines used to transfer MMH would also undergo potable water flushes followed by an isopropyl alcohol (IPA)/demineralized water flush . Similarly, potable water would be used to flush oxidizer transfer equipment and lines after NTO has been transferred to the satellite. The rinses resulting from the first three flushes of potable water for MMH and NTO lines and equipment are considered hazardous waste. Further flushes with IPA and demineralized water may or may not be hazardous waste depending on the waste characterization. Approximately 23 liters (5 gallons) of sodium hydroxide solution used for soaking small oxidizer transfer equipment parts (e.g., seals and fittings) would be added to the oxidizer rinse water. All five rinse-water waste streams would be collected in separate, Department of Transportation (DOT)-approved containers. The containers would be placed in the waste propellant area (satellite accumulation points) outside the facility until retrieved by the base contractor (USAF, 1995c).

The fuel and oxidizer rinse-water wastes may or may not be hazardous depending on how the waste was generated and/or the characteristics of the wastes. Waste from each drum would be sampled and characterized based on laboratory analysis and the generation process. Based on the results of the waste characterization, drums would be labeled as hazardous or non-hazardous and disposed of according to applicable regulations by the base contractor (USAF, 1995c).

The sodium hydroxide solution used in the oxidizer scrubber would be changed about once every five to ten years. The base contractor would pump the spent solution into approved containers, and then dispose of the waste according to its tested characteristics. The citric acid solution used in the fuel scrubber would be collected and disposed by the base contractor as non-hazardous waste (USAF, 1995c).

During gaseous nitrogen purging of equipment and lines used to transfer anhydrous hydrazine and MMH to the satellite, a liquid separator would collect liquid droplets remaining in the equipment as the air streams pass through the hypergolic vent scrubber system. Prior to loading with NTO, approximately 23 liters (5 gallons) of a mixture of hydrazine and MMH would be transferred from the liquid separator to an approved container. The container would be placed in the waste propellant area outside the facility until retrieved by the base propellant contractor (USAF, 1995c).

Solid hazardous wastes would also be generated almost exclusively from fuel and oxidizer transfer operations. Pads, wipes, and other solids would be used to clean drips of anhydrous hydrazine (N_2H_4), MMH, and NTO. Solids coming into contact with a fuel or oxidizer would be double-bagged and placed in a DOT-approved container. A separate container would be used for each fuel or oxidizer. Containers would be labeled as hazardous waste and accumulated in

the waste fuel and oxidizer areas until collected by the base contractor. Because solids contaminated with MMH and NTO are acutely toxic hazardous waste, these containers would be moved to a 90-day waste accumulation facility within 72 hours if amounts exceed 1.1 liter (1 quart) (USAF, 1995c).

Processing of routine payload spacecraft would increase hazardous waste production at the launch sites by very small percentages. As an example, the hazardous waste total in Table 4.1-2 for processing two payloads per year would increase hazardous waste production at CCAFS by about 1.1% (USAF, 1995c).

4.1.1.3 Launch Vehicle Impacts

The processing of launch vehicles at the launch site requires the use of hazardous materials. It also results in the production of hazardous waste. The Atlas V is used as an example of hazardous materials usage and hazardous waste generation by a launch vehicle system since it is a large vehicle with solid rocket motors (SRMs). Table 4.1-3 lists the estimated amounts of hazardous materials to be used per launch for the Atlas V 500 series vehicle with five SRMs. Table 4.1-4 lists the quantities of hazardous wastes that would be generated by each launch of an Atlas V 500 vehicle.

Table 4.1-3 Hazardous Materials Used per Atlas V 500 Launch

Material	Quantity	Purpose
Petroleum, oil, lubricants	2177 kg (4790 lb)	Booster Processing
VOC-based primers, topcoats, coatings	145 kg (320 lb)	External maintenance
Non-VOC based primers, topcoats, coatings	86 kg (190 lb)	External maintenance
VOC-based solvents, cleaners	627 kg (1380 lb)	Surface cleaning
Non VOC-based solvents, cleaners	432 kg (950 lb)	Surface cleaning
Corrosives	2500 kg (5500 lb)	Surface preparation
Adhesives, sealants	1036 kg (2280 lb)	Structural, electronic
Other	291 kg (640 lb)	Booster processing
Electron QED cleaner	5.7 liter (5 qt)	SRM cleaning
MIL-P-23377 primer	2.8 liter (5 pt)	SRM exterior
Silicone RTV-88	45 liter (10 gal)	SRM sealant
Electric insulating enamel	0.1 kg (5 oz)	SRM touchup
Acrylic primer	22 liter (5 gal)	SRM touchup
Conductive paint	45 liter (10 gal)	SRM antistatic coating
Chemical conversion coating	0.3 kg (10 oz)	SRM surface preparation
Cork-filled potting compound	5.7 liter (5 qt)	SRM thermal protection
Epoxy adhesive	5.7 liter (5 qt)	SRM modification

Derived from USAF, 2000a to illustrate quantities associated with Atlas V 500 using 5 SRMs.

Table 4.1-4 Estimated Hazardous Waste Generated per Atlas V 500 Launch (USAF, 2000a)

Characteristic RCRA Wastes	Quantity
Ignitable D001 RCRA Wastes	445 kg (980 lb)
Characteristic RCRA Wastes	18 kg (40 lb)
Corrosive D002 RCRA Wastes	2,500 kg (5,500 lb)
Commercial Chemical Products (U) RCRA Wastes	1,409 kg (3,100 lb)
Reactive D003 RCRA Wastes	227 kg (500 lb)
Miscellaneous Wastes	114 kg (250 lb)
Total	4,714 kg (10,370 lb)

4.1.1.4 Pollution Prevention

No Class I ozone-depleting substances (ODSs) would be used in the routine payload processing facilities. Small quantities of materials that contain EPA-17 targeted industrial toxic materials may be used during spacecraft processing. These include coatings and thinners that typically contain toluene and xylene. Toluene and xylene are also listed chemicals under the Emergency Planning and Community Right-to-Know Act (EPCRA) Section 313. Payload processing contractors must track usage of all EPCRA-listed chemicals and report emissions to the responsible government organization at CCAFS, KSC, or VAFB.

All routine payload spacecraft processing activities would be in compliance with the CCAFS Pollution Prevention Management Plan (PPMP), the VAFB PPMP, or the KSC Pollution Prevention Program. This compliance would minimize pollution and meet the regulatory requirements relative to pollution prevention as described in Section 3.4. Processing of routine payload spacecraft would not substantially affect the ability of CCAFS, KSC, or VAFB to achieve pollution prevention goals.

4.1.2 Health and Safety

As described in Section 3.5, CCAFS and VAFB range safety regulations ensure that the general public, launch area personnel, and foreign land masses are provided an acceptable level of safety, and that all aspects of pre-launch and launch operations adhere to public laws. Range safety organizations review, approve, monitor, and impose safety holds, when necessary, on all pre-launch and launch operations.

All payload processing and launch facilities used to store, handle, or process ordnance items or propellants must have an Explosive Quantity-Distance Site Plan. All payload and launch programs that use toxic materials must have a Toxic Release Contingency Plan (TRCP) for facilities that use the materials. A

Toxic Hazard Assessment (THA) must also be prepared for each facility that uses toxic propellants. The THA identifies the safety areas to be controlled during the storage, handling, and transfer of the toxic propellants.

Hazardous materials such as propellant, ordnance, chemicals, and booster/payload components are transported in accordance with DOT regulations for interstate shipment of hazardous substances (Title 49 CFR 100-199). Hazardous materials such as liquid rocket propellant are transported in specially designed containers to reduce the potential of a mishap should an accident occur.

4.1.2.1 Spacecraft Processing Impacts

4.1.2.1.1 Hazardous and Toxic Propellants

Processing of routine payload spacecraft would involve the handling of toxic and hazardous propellants including hydrazine, MMH, and NTO. Hydrazine and MMH are strong irritants and may damage eyes and cause respiratory tract damage. Exposure to high vapor concentrations can cause convulsions and possibly death. Repeated exposures to lower concentrations may cause toxic damage to liver and kidneys as well as anemia. The U. S. Environmental Protection Agency (EPA) classifies hydrazine and MMH as probable human carcinogens. Both are flammable and could spontaneously ignite when exposed to an oxidizer. NTO is a corrosive oxidizing agent. Contact with the skin and eyes can result in severe burns. Inhalation of vapors can damage the respiratory system. NTO would ignite when combined with fuels and may promote ignition of other combustible materials. Fires involving NTO burn vigorously and produce toxic fumes.

Health and safety impacts to personnel involved in the propellant loading operations in the payload processing facilities would be minimized by adherence to U. S. Occupational Safety and Health Administration (OSHA) and U. S. Air Force Occupational Safety and Health (AFOSH) regulations. These regulations require use of appropriate protective clothing and breathing protection. Toxic vapor detectors are used in the facilities to monitor for leaks and unsafe atmospheres.

Spills, fires, and explosions would be possible outcomes from accidents during payload processing. A violent fire or an explosion could produce severe injuries or even death. A catastrophic accident of this type during payload processing would be extremely unlikely. Most propellant spills would be contained within the processing facility with no health impacts to personnel. The most likely consequences of a severe accident during processing would be some level of damage to the spacecraft and the immediate liquid propellant transfer area. Facility design would limit damage to the spacecraft and the transfer area. Injuries would not be anticipated if facility personnel follow emergency procedures. If human error (e.g., not following procedures, not wearing

protective clothing, or not doning breathing equipment) occurs at the time of the accident, exposure of personnel to toxic propellant vapors may result. This would give some level of short-term adverse health impact and an incremental increase in the chance of the exposed individual developing cancer.

Extremely small quantities of toxic propellant vapors would be emitted from payload processing facilities during propellant loading operations. These small emissions would not impact the health of the public or on-site personnel. The THA for the facility would provide additional protection by identifying the safety areas to be cleared of unprotected personnel during propellant operations.

4.1.2.1.2 Inadvertent Ignition of SRM

Routine payload spacecraft may be equipped with SRMs with up to 600 kg (1320 lb) of solid propellant. SRMs are installed under rigidly controlled safety requirements in facilities sited for the proper type of propellant and amount of explosive yield. Static electricity, a potential ignition energy source, is controlled using wrist- and leg-stats on personnel, antistatic Kevlar coveralls, and careful grounding of all flight and ground hardware. Electric circuits are tested for stray currents before connections are made. These measures reduce the likelihood of accidental motor ignition to an extremely low level, minimizing risks to health and safety.

4.1.2.1.3 Nonionizing Radiation

Most of the proposed spacecraft would be equipped with radar, telemetry, and tracking system transmitters. For radar, a power limit of 10 kW encompasses the proposed programs. A radar instrument of this size on a nadir-viewing satellite can provide useful information with no risk to people on the Earth or in aircraft above the Earth. A 2-kilowatt radar (94 GHz with a 1.95m (6.4 ft) antenna) drops to safe levels in less than 2.5 km (1.6 mi) from the satellite. Considering that Low Earth Orbit (LEO) altitudes range from 200 to 800 km (124 to 497 mi), such a system presents no radiation hazard to populated regions of Earth or its' atmosphere.

The accepted levels for human exposure to radio frequency electromagnetic fields (3 kHz to 300 GHz) are described in the "IEEE Standard for Safety Levels with Respect to Human Exposure to Radio Frequency Electromagnetic Fields, 3 kHz to 300 GHz" (IEEE C95.1-1991). IEEE C95.1-1991 is recognized as a standard of the American National Standard Institute (ANSI). IEEE Standard C95.3-1991, entitled "IEEE Recommended Practice for the Measurement of Potentially Hazardous Electromagnetic Fields – RF and Microwave," is also recognized as an ANSI standard and provides formulas needed to determine the fields associated with RF and microwave sources.

The proposed action involves the use of lasers for science instrumentation. Admissible safety analysis techniques are well established based on ANSI Z136.1-2000 and ANSI Z136.6-2000. According to ANSI Z136.6-2000, the

maximum permissible exposure (MPE) values are below known injury levels. Therefore, for the purpose of this FEA, we will consider a laser to be eye-safe when potential exposure levels are below the MPE value. The ANSI safety analysis applies to any laser (not only nadir-pointing laser systems) that might be operationally or accidentally pointed toward people, aircraft, or the Earth. Laser systems meeting the Routine Payload Checklist must be analyzed and found to be within ANSI standards for safe operations if they can be operated in an Earth-pointing mode. Earth-pointing laser systems are safely and routinely used from a variety of airborne and orbital platforms for scientific measurements.

Since the energy threshold for skin damage exceeds that for eye injury, any system found to be eye-safe would not present a substantial hazard to skin, structures, or plants. Gases and particles in the atmosphere can absorb the energy from laser systems and so cause changes in atmospheric chemistry by initiating various chemical reactions. However, for a typical laser system utilized by Earth orbiting spacecraft, the mean beam power and, therefore, the maximum available atmospheric energy deposition rate is not substantial when compared to the mean solar energy deposition rate so that substantial atmospheric impacts are not expected. For LIDAR and topographical mapping applications, the local impact from use of the laser is "infrequent" since the system only samples a particular location occasionally (e.g., once a week or month) and the sampling time corresponds to a few nanoseconds (i.e., only one pulse). No cultural impact is expected from the "infrequent" and eye-safe laser use associated with NASA's space and Earth exploration missions.

Per NPG 8715.3 Section 6.16.1.2, there are Federal (21 CFR Part 1040) and NASA requirements for the safe use of lasers. ANSI documents outline permissible exposure limits needed to avoid eye and skin injury from lasers (ANSI Z136.1-2000 and ANSI Z136.2-2000) and to safely use visible lasers outdoors (ANSI Z136.6-2000). In addition to eye and skin hazards, ANSI Z136.6-2000 also requires that visible lasers, used outdoors, do not cause interference with spacecraft and aircraft operations. For visible lasers, the Federal Aviation Administration must provide a letter of non-objection for outdoors scientific use of lasers. This added requirement for visible lasers is needed to protect potentially exposed persons from hazardous reactions to bright light. These hazards include transient visual effects of laser beams such as flash blindness, afterimage, glare, and startle. ANSI Z136.6-2000 also documents the need for a standard operating procedure (SOP) for use of all Class 3b and Class 4 lasers. Per NPG 8715.3 and ANSI Z136.6-2000, when a planned laser operation has the potential for the beam to strike an orbiting craft, the Program Manager or designated laser safety officer must contact the laser safety clearing house to obtain a “Site Window” clearance. The clearance is obtained from the Orbital Safety Officer, U.S. Space Command/J3SOO at Cheyenne Mountain Air Force Base.

Per NPG 8715.3 Section 6.16.3, airborne Class III-B and IV laser operations shall include system interlocks to prevent inadvertent exposure to laser beam output and shall only proceed in accordance with the prescribed mission or test plan. The mission and test plans must include a hazard evaluation as well as written safety precautions. The hazard analysis shall consider catastrophic events and the need for very reliable, high-speed laser shutdown should such events occur (ANSI Z136.1-2000). Qualified personnel shall perform the laser hazard evaluations, which shall consider and document the atmospheric effects of laser beam propagation, the transmission of laser radiation through intervening materials, the use of optical viewing aids, and other resultant hazards (e.g., electrical, cryogenic, and toxic vapors).

4.1.2.1.4 Ionizing Radiation

Routine payload spacecraft could use small amounts of radioactive materials as scientific instrument components. The amount of radioactive material that could be carried is strictly limited by the approval authority level delegated to the NASA Nuclear Flight Safety Assurance Manager (NFSAM) by NPG 8715.3. As part of the approval process, the spacecraft program manager must prepare a Radioactive Materials Report (RMR) that describes all of the radioactive materials to be used on the spacecraft. The RMR would be submitted to the NFSAM for safety review and included in the Routine Payload Checklist (Appendix C).

The amount of radioactive materials used on routine payload spacecraft would be limited to small quantities, typically a few millicuries, and the materials would be encapsulated and installed into the spacecraft instruments prior to arrival at the launch site. Therefore, the use of radioactive materials in routine payloads would not present any substantial impact or risk to the public or to the environment during normal or abnormal launch conditions.

4.1.2.1.5 Payload Transport Accidents

When payload processing is completed, the payload would be encapsulated and transported to the launch site. Accidents during transport would be extremely unlikely because movement of the payload would be carefully controlled in convoys with security escorts. Several factors would minimize the consequences of an accident should one occur. The forces imparted to the encapsulated spacecraft during an accident would be small because of the low speeds involved during transport. The spacecraft would be protected from damage by the capsule and a protective blanket. Should the spacecraft be damaged, it would be unlikely that the propellant tanks would be damaged. In the unlikely event of a propellant leak, transport and security personnel would be protected by following emergency procedures and wearing appropriate protective clothing (NASA, 1993b).

4.1.2.2 Launch Vehicle Impacts

The Range Safety organizations at CCAFS and VAFB use models to predict launch hazards to the public and on-site personnel prior to every launch. These models calculate the risk of injury resulting from toxic gases, debris, and blast overpressure both from both nominal launches and launch failures. Launches are postponed if predicted risk of injury exceeds acceptable limits. The allowable collective public risk limit in use at CCAFS and VAFB is extremely low (30×10^{-6}).

The proposed action involves launch vehicles that have previously been approved for launch of spacecraft from CCAFS and VAFB. This action would not increase launch rates nor utilize launch systems beyond the scope of approved programs at CCAFS and VAFB.

4.1.3 Land Resources

4.1.3.1 Spacecraft Processing Impacts

The proposed processing of routine payload spacecraft does not include any construction or modification of facilities or roadways that would potentially impact land resources. Processing activities would take place within closed structures and precautions would be taken to prevent and control hazardous materials in accordance with facility operating plans. Spills of liquid propellants would be controlled through catchment systems and holding tanks in the processing facilities and would not impact surrounding soils or land resources.

Propellant spills could occur during propellant transfer to or from the processing facility or during spacecraft transport to the launch pad. Propellant spills onto soils could also occur as a result of spacecraft impact following a launch failure. Emergency response personnel would mitigate the impact of any spill. Spilled propellant would be collected and disposed of by a certified disposal contractor. Contaminated soils would be removed and treated as hazardous waste in accordance with Federal, State, and local regulations. Short-term impacts to localized soils may result, but long-term impacts would not be substantial.

4.1.3.2 Launch Vehicle Impacts

The use of SRMs on launch vehicles would result in the deposition of hydrogen chloride (HCl) and aluminum oxide particulates on soils near the launch pad. During a Delta II launch on November 4, 1995, pH in the surrounding air was monitored to detect any changes caused by HCl vapors or deposition. Test strips were placed as near as the perimeter of the launch pad. Launch conditions were calm, which would yield maximum HCl deposition. No pH changes were observed on any test strips, and there was no evidence of acid

deposition. The lack of pH change associated with the small ground cloud indicates that even with exposure to the concentrated cloud, acid deposition would be minimal (USAF, 1996c).

The soils on VAFB contain a substantial amount of organic matter, which results in a natural buffering capacity that would potentially counteract the effects of any HCl they receive (USAF, 1995a). The soils of the CCAFS and KSC barrier islands are alkaline with high buffering capacity (SCHMALZER, 1998). Despite additions of substantial amounts of acidic deposition from 43 launches over a ten-year period, the affected soils at CCAFS showed no decrease in buffering capacity (USAF, 1995a). Therefore, the HCl content of the exhaust plume from solid rocket motors would not be expected to adversely affect soils around launch sites at CCAFS and VAFB. In addition, aluminum oxide would not affect the soils because it would be deposited as a stable compound. Therefore, no measurable direct or indirect, short- or long-term effects on soil chemistry would be expected as a result of launch activities (USAF, 1998).

Launch anomalies could result in impacts to near-field soils due to contamination from rocket propellant. In the unlikely occurrence of a launch anomaly, any spilled propellant would be collected and disposed of by a certified disposal contractor in accordance with the Spill Prevention Control and Countermeasures (SPCC) Plan. Contaminated soils would be removed and treated as hazardous waste in accordance with Federal, State, and local regulations. Short-term impacts to soils may result, but long-term impacts would not be significant (USAF, 1998).

4.1.4 Water Resources

An impact to water resources may be considered significant if the action interfered with drainage, exceeded the capacities of the regional supply systems, or resulted in degradation of surface water or groundwater quality such that existing surface water uses would be impaired.

4.1.4.1 Spacecraft Processing Impacts

There would be no impacts to water resources from spacecraft processing. Processing activities would take place within existing structures and precautions would be taken to prevent and control spills of hazardous materials. Large spills of spacecraft liquid propellant would be controlled through catchment systems in the processing facilities. Use of all chemicals used for processing would be managed to prevent contamination of surface waters and groundwater.

The typical operation of the facility proposed for use for routine payload processing would require an average of approximately 500 liters (110 gallons) per day of water for potable use and for payload processing activities (ASTROTECH, 1993). This water would be supplied by the existing water

distribution systems at CCAFS, KSC, or VAFB and would have a negligible impact on system capacity or surface and groundwater resources. The total volume of wastewater generated by the facility has been estimated to average about 500 liters (110 gallons) per day (ASTROTECH, 1993). This wastewater would be processed through the existing wastewater handling and treatment systems at CCAFS, KSC, and VAFB and would have a negligible impact on system capacity or surface and groundwater resources. The proposed action fits within the current scope of water discharge permit definitions. Local and regional water resources would not be affected since there would be no substantial increase in use of surface or groundwater supplies.

4.1.4.2 Launch Vehicle Impacts

Water supplied by municipal sources would be used at CCAFS and VAFB launch complexes for deluge water, launch pad wash-down, and potable water. Most of the deluge and launch pad wash-down water would be collected in concrete basins; however, minor amounts could drain directly to grade. If the wastewater in the collection basins meets the criteria set forth in the industrial wastewater discharge permit, it would be discharged directly to grade at the launch site. If it fails to meet the criteria, it would be treated on-site and disposed to grade or collected and disposed of by a certified contractor. No discharges of contaminated water are expected to result from launch vehicle operations.

The emission of HCl and aluminum oxide particulates by solid rocket motors (SRMs) would be the primary concern associated with the impact of nominal launches on water quality. Short-term acidification of surface water could result from contact with the exhaust cloud and through HCl fallout from the cloud. Wet deposition of HCl may occur during rainfall. Impacts to surface waters should be restricted to the area immediately adjacent to the launch pad. No substantial impacts to surface waters of nearby oceans, lagoons, or large inland water bodies should occur due to the buffering capacities of these bodies. A short-term decrease in pH could occur in small streams and canals near the launch pad. Since there would only be a temporary decrease in pH, aluminum oxide deposition should not contribute to increased aluminum solubility in area surface waters (SCHMALZER, 1998). A nominal launch would have no substantial impacts to the local water quality.

Under normal flight conditions, vehicle stages that do not reach orbit have trajectories that result in ocean impact. Stages that reach initial orbit would eventually re-enter the atmosphere as a result of orbital decay. Corrosion of stage hardware would contribute various metal ions to the water column. Due to the slow rate of corrosion in the deep-ocean environment and the large quantity of water available for dilution, toxic concentrations of metals are not likely to occur. Relatively small amounts of propellant would also be released into the

ocean along with the various spent stages. Since the liquid stages and SRMs would be burned to depletion in-flight, there would be only relatively small amounts of propellant left in the stages that impact the ocean. The release of solid propellants into the water column would be slow, with potentially toxic concentrations occurring only in the immediate vicinity of the propellant. Insoluble fractions of RP-1 propellant would float to the surface and spread rapidly to form a localized surface film that would evaporate. Hydrazine fuels are soluble and would also disperse rapidly. Because of the limited number of launch events scheduled, the small amount of residual propellants present, and the large volume of water available for dilution, no adverse impacts are expected from the re-entry of spent stages (USAF, 1998).

On-pad accidental or emergency releases of small quantities of propellants are unlikely to occur. In the event of a release, spilled propellants would be collected and disposed of by a certified disposal contractor in accordance with the SPCC plan. Potential contamination of groundwater or surface water resulting from accidental or emergency spills of propellants during propellant loading would be minimized through adherence to safety procedures. Potential leakage or spills from propellant storage tanks would be contained in holding basins that surround the tanks. Any accidental or emergency release of propellants after loading would be channeled to an impermeable concrete catch basin. Contaminants collected in the catch basin would be disposed of in accordance with appropriate State and Federal regulations (USAF, 1998).

Launch anomalies could result in impacts to local water bodies due to contamination from rocket propellant. In the unlikely occurrence of a launch anomaly, spilled propellant could enter water bodies close to the launch pad. Potential contamination would primarily occur from hydrazine, NTO, and SRM propellant. Unburned solid-propellant dispersed by the explosion could fall on surface waters. Ammonium perchlorate in the propellant is soluble in water, but dissolves slowly. Trace amounts could disassociate into ammonium ion and perchlorate ion. At low to moderate concentrations, ammonium ion is a plant nutrient and could stimulate plant growth for short periods of time. At higher concentrations, the ammonium ion is toxic to aquatic life and could cause short-term mortalities of aquatic animals. The perchlorate ion is somewhat toxic because it reacts with (oxidizes) organic matter with which it comes into direct contact. HTPB could be biologically degraded over time. Powdered aluminum would rapidly oxidize to aluminum oxide, which is non-toxic at the pH that prevails in surface waters surrounding CCAFS. (USAF, 2000a) Recovered solids would be removed from near-shore ocean and/or river environments and treated as hazardous waste in accordance with Federal, State, and local regulations. Short-term impacts to the near-shore environments may result, but long-term impacts would not be significant due to the buffering capacity of large water bodies (USAF, 1998).

4.1.5 Air Quality

The Federal Clean Air Act (CAA), as amended in 1990, covers a range of potential environmental effects from the release of air pollutants, ranging from criteria pollutants (CAA 108) to hazardous air pollutants (CAA 112). Control of chemicals that cause depletion of stratospheric ozone is also included. The U.S. manufacture and use of these ozone-depleting chemicals is strictly prohibited or controlled by the CAA.

CAA Section 112 addresses the reduction of emissions of 189 hazardous chemicals. It is implemented by a system of regulations called the National Emission Standards for Hazardous Air Pollutants (NESHAPs). These regulations are being developed for 766 industrial source categories and subcategories organized into 18 industry groups. The NESHAPs having potential impact on the spacecraft and launch industries are:

- Aerospace Industries (surface coatings, adhesives, depainting etc.)
- Hard and Decorative Chromium Electroplating & Chromium Anodizing Tanks
- Halogenated Solvent Cleaning
- Miscellaneous Organic Chemical Processes – Explosives/Propellants

The potential for impacts of any of these NESHAPs on spacecraft launch site operations is largely yet to be determined, since some of the above NESHAPs are still under development or promulgation. However, they are oriented toward manufacturing processes and substantial impacts on operations are minimal. However, in cases where paint application or removal, solvent wipe cleaning or adhesive bonding is planned at the launch site, the Aerospace NESHAP would be consulted and followed. Likewise, if launch site processing includes cleaning with halogenated solvents by immersion or vapor cleaning, that NESHAP would be consulted and followed. The controlled halogenated solvents are listed as any product containing more than 5% of one or more of the following chemicals: methylene chloride, perchloroethylene, trichloroethylene, 1,1,1-trichloroethane, carbon tetrachloride, and chloroform.

4.1.5.1 Impacts from Payload Processing

4.1.5.1.1 Routine Payload Processing

As described in Chapter 2 and Figure 2.1, the processing of routine payload spacecraft would consist of a number of steps to assemble, test, service, integrate, and launch the spacecraft. Some of these steps would be hazardous (such as propellant loading or ordnance installation). Specific activities identified as having potential environmental impact are described in this section.

The cleaning of the payload processing facility (PPF) and shipping container surfaces involves the use of solvents to remove organic contaminants. The standard solvent used is isopropyl alcohol (IPA), and approximately 208 liters (55 gallons) of IPA are used per mission. IPA is used because of its low toxicity and low flammability. Ethyl alcohol may also be used for optical surfaces, but in very small quantities. It is non-toxic and somewhat flammable. Small amounts of other chemicals are often used incidentally in preparing spacecraft for assembly, test, loading, and launch. These are listed in section 4.1.1 and are used in such minor amounts and are of such low toxicity that they present no substantial potential for environmental impact.

Loading of hypergolic propellants is performed either in the principal PPF or an auxiliary facility. The fuel can be either hydrazine for mono- or bipropellant systems or MMH for bipropellant systems. The oxidizer used for bipropellant systems is NTO. Each loading operation is independent, sequential and conducted using a closed loop system. During the operation, all propellant liquid and vapors are contained. If small leaks occur during propellant loading, immediate steps are taken to stop loading, correct the leakage, and clean up leaked propellant with approved methods before continuing. Personnel wear protective clothing during hazardous propellant operations. Leakage is absorbed in an inert absorbent material for later disposal as hazardous waste, or aspirated into a neutralizer solution. Propellant vapors left in the loading system are routed to air emission scrubbers. Liquid propellant left in the loading system is either drained back to supply tanks or into waste drums for disposal as hazardous waste.

Estimates of scrubber emission rates during fueling operations, based on the Titusville Astrotech PPF experience, are 0.045 kg/hr (0.099 lb/hr) for N_2H_4, 0.13 kg/hr (0.28 lb/hr) for NTO and 0.064 kg/hr (0.14 lb/hr) for MMH. These rates are for typical periods of less than 30 minutes per spacecraft (ASTROTECH, 1993). Although both NTO and hydrazine are classified as hazardous air pollutants (HAPs), the NESHAP regulations under Title III of the CAA have not yet established control standards. The packed bed scrubber systems usually used are considered Best Available Control Technology (BACT) and should be considered acceptable when NESHAP regulations are promulgated.

Many PPF facilities also incorporate emergency power generators, either propane or diesel powered. Emissions from these generators are regulated as stationary sources by the Santa Barbara County Air Pollution Control District (SBCAPCD) for VAFB and the Florida Department of Environmental Protection (FDEP) for CCAFS and KSC, and require permits from these agencies.

4.1.5.1.2 Payload Propellant Spills

Inadvertent releases of toxic air contaminants are possible as a result of accidents during payload processing, transportation, and launch. The largest releases would result from the spillage of the entire quantity of liquid

propellants. Lesser releases would result from fires or explosions that would consume significant fractions of the propellants. Safety procedures in place at CCAFS, KSC, and VAFB ensure that these events are unlikely to occur. In addition, spill response planning procedures are in place to minimize spill size and duration, as well as possible exposures to harmful air contaminants. The magnitude of air releases from payload accidents would be relatively small compared to possible releases from accidents involving launch vehicles. They would have no substantial impact on ambient air quality.

Appendix B documents the mean hazard distance predictions for release of the routine payload's maximum liquid propellant loads, which consist of 1000 kg (2200 lb) of hydrazine, 1000 kg (2200 lb) of MMH, and 1200 kg (2640 lb) of NTO. The U. S. Air Force Toxic Chemical Dispersion Model (AFTOX) Version 4.0 (Kunkel, 1991) was used to predict the mean hazard distances resulting from the spillage of each of the three liquid propellants. AFTOX is a simple Gaussian puff/plume dispersion model that assumes a uniform windfield. AFTOX was used to predict mean distances to selected downwind concentrations of each toxic vapor. The selected concentrations used for this analysis were the Short-Term Emergency Guidance Levels (SPEGLs) for hydrazine (0.12 ppm 1-hour average), MMH (0.26 ppm 1-hour average), and nitrogen dioxide (1.0 ppm 1-hour average). AFTOX runs were conducted for daytime and nighttime conditions at two different wind speeds (2 and 10 m/s (7 and 32 feet per second)). These meteorological conditions were selected to illustrate possible hazard distances. Other meteorological conditions would produce different hazard distances but would not change the conclusion that the concentrations fall below hazardous levels within a relatively short distance of the release. Appendix B provides some AFTOX output relevant to this FEA.

Spillage of the entire payload propellant load, while unlikely, could occur during payload processing, payload transportation, payload mating to the launch vehicle, or during the actual launch operation. A launch accident could result in payload ground impact resulting in propellant tank rupture and spillage. The cases modeled by AFTOX are worst case since they assume that the spills are unconfined and evaporate to completion without dilution or other mitigating action. The following sections summarize the results presented in Appendix B and document the areas and distances that would temporarily have hazardous levels of the propellants in the event of a spill. These results indicate that the chemicals are diluted to non-hazardous levels in reasonably short distances.

4.1.5.1.2.1 CCAFS AND KSC

The mean hazard distances predicted by AFTOX for the CCAFS and KSC area are displayed in Table 4.1-5. An unconfined spill of 1000 kg (2200 lb) of hydrazine would produce a spill area of 107 m^2 (1156 ft^2) and a mean hazard distance of up to 1493 m (4897 ft). An unconfined spill of 1000 kg (2200 lb) of MMH would produce a spill area of 114 m^2 (1231 ft^2) and a mean hazard

distance of up to 1452 m (4763 ft). An unconfined spill of 1200 kg (2640 lb) of NTO would produce a spill area of 80 m^2 (864 ft^2) and a mean hazard distance of up to 5680 m (18,630 ft) for NTO. Note: AFTOX predicts that NTO liquid spills would be gas releases at 32°C (90°F) ambient temperature. For modeling purposes, the gas release was assumed to have a duration of five minutes. In summary, all mean hazard distances for toxic air releases from payload accidents at CCAFS and KSC would be less than 5.7 km (3.4 mi) for the meteorological conditions considered. This would be the maximum distance downwind that would require evacuation and control by range safety authorities.

Table 4.1-5 Mean Hazard Distances to SPEGL (1-Hr Average) Exposure Limits as Predicted by AFTOX for Payload Maximum Liquid Propellant Spills at CCAFS and KSC

Chemical (SPEGL)	Spill Quantity	Wind speed	Day (32°C (90°F))	Night (5°C (41°F))
Hydrazine	1000 kg (2200 lb)	2 m/s (6.6 ft/s)	655 m (2148 ft)	669 m (2194 ft)
(0.12 ppm)		10 m/s (33 ft/s)	1493 m (4897 ft)	747 m (2450 ft)
MMH	1000 kg (2200 lb)	2 m/s (6.6 ft/s)	641 m (2102 ft)	769 m (2522 ft)
(0.26 ppm)		10 m/s (33 ft/s)	1452 m (4763 ft)	773 m (2535 ft)
NTO	1200 kg (2640 lb)	2 m/s (6.6 ft/s)	1230 m (4034.4 ft)	2574 m (8443 ft)
(1.0 ppm)		10 m/s (33 ft/s)	5680 m (18630 ft)	3411 m (11188 ft)

4.1.5.1.2.2 VAFB

The mean hazard distances predicted by AFTOX for VAFB are displayed in Table 4.1-6. An unconfined spill of 1000 kg (2200 lb) of hydrazine would produce a spill area of 99 m^2 (1069 ft^2) and a mean hazard distance of up to 1140 m (3739 ft). An unconfined spill of 1000 kg (2200 lb) of MMH would produce a spill area of 115 m^2 (1242 ft^2) and a mean hazard distance of up to 1170 m (3838 ft). An unconfined spill of 1200 kg (2640 lb) of NTO would produce a spill area of 81 m^2 (875 ft^2) and a mean hazard distance of up to 3390 m (11,119 ft) for nitrogen dioxide. In summary, all mean hazard distances for toxic air releases from payload accidents at VAFB would be less than 3.4 km (2.1 mi) for the meteorological conditions considered. This would be the maximum distance downwind that would require evacuation and control by range safety authorities.

Table 4.1-6 Mean Hazard Distances to SPEGL (1-Hr Average) Exposure Limits as Predicted by AFTOX for Payload Maximum Liquid Propellant Spills at VAFB

Chemical (SPEGL)	Spill Quantity	Wind speed	Day (20°C (68°F))	Night (5°C (41°F))
Hydrazine	1000 kg (2200 lb)	2 m/s (7 ft/s)	524 m (1719 ft)	667 m (2188 ft)
(0.12 ppm)		10 m/s (33 ft/s)	1140 m (3739 ft)	738 m (2421 ft)
MMH	1000 kg (2200 lb)	2 m/s (7 ft/s)	537 m (1761 ft)	773 m (2535 ft)
(0.26 ppm)		10 m/s (33 ft/s)	1170 m (3838 ft)	780 m (2558 ft)
NTO	1200 kg (2640 lb)	2 m/s (7 ft/s)	924 m (3031 ft)	2580 m (8462 ft)
(1.0 ppm)		10 m/s (33 ft/s)	2940 m (9643 ft)	3390 m (11119 ft)

4.1.5.2 Air Quality Impacts from Launch Vehicles

All candidate launch vehicles considered for launch of routine payload spacecraft have been reviewed through the environmental impact analysis process and determined to have no substantial impact on ambient air quality. These findings are provided in existing NEPA documentation. A listing of applicable NEPA documentation is provided in Appendix A. In addition, range safety regulations at CCAFS and VAFB prohibit launches when air dispersion models predict a toxic hazard to the public. Consequently, the public in and around the launch sites is unlikely to be exposed to concentrations of any launch vehicle emissions that exceed the allowable public exposure limits adopted by the range safety organizations.

Air dispersion models are used at CCAFS and VAFB to predict toxic hazard corridors for nominal launches, catastrophic launch failures, and spills of liquid propellants. Among the models used are the Rocket Exhaust Effluent Dispersion Model (REEDM) and AFTOX. The following sections provide a summary of model results performed previously for several of the candidate launch vehicles. As documented in previous EAs and EISs performed for the candidate launch vehicles, these emissions would not substantially impact ambient air quality or endanger public health. The potential for an accidental release of liquid propellants would be minimized by adherence to applicable U. S. Air Force and NASA safety procedures. All spills would be managed in accordance with a spill response plan already in place at CCAFS, KSC, and VAFB.

This summary uses the Atlas V and Delta IV vehicles as examples for the nominal launch cloud since these vehicles have the largest emission rates at lift-off of the candidate vehicles. The Titan II (VAFB) and Delta II (CCAFS) are used as examples for toxic clouds generated by liquid propellant spills and catastrophic launch failures since these vehicles carry the largest quantity of toxic hypergolic propellants (hydrazines and NTO) of the candidate vehicles. The REEDM is the primary air dispersion model used at CCAFS and VAFB to predict toxic vapor concentrations and toxic hazard corridors for launch operations.

4.1.5.2.1 Nominal Launches

The candidate vehicles described in Chapter 2 include the Athena, the Atlas family, the Delta family, Pegasus, Taurus, and Titan II. The liquid engines and solid rocket motors (SRMs) on these vehicles produce air emissions during lift-off and flight. The primary emission products from liquid engines using RP-1 (kerosene) and liquid oxygen (LOX) are carbon dioxide, carbon monoxide, water vapor, oxides of nitrogen, and carbon particulates. Liquid engines using Aerozine-50 (A-50) (mixture of hydrazine fuels) and NTO emit carbon dioxide, carbon monoxide, water vapor, and oxides of nitrogen. Liquid engines using liquid hydrogen (LH2) and LO_X emit water vapor and oxides of nitrogen. Emissions from SRMs include hydrogen chloride, aluminum oxide particulates, carbon monoxide, carbon dioxide, water vapor, and oxides of nitrogen. Most carbon monoxide emitted by liquid engines and SRMs is oxidized to carbon dioxide during afterburning in the exhaust plume.

Table 4.1-7 lists the quantity of criteria pollutants and HCl that would be emitted into the lowest 915 m (3,000 ft) of atmosphere during each launch of five candidate launch vehicles. The criteria pollutants include volatile organic compounds (VOC), nitrogen oxides (NO_X), carbon monoxide (CO), sulfur dioxide (SO_2), and particulate matter less than 10 microns in diameter (PM_{10}). Emission of aluminum oxide from the SRMs is included in the PM_{10} column. These five vehicles represent the largest emission sources from various combinations of liquid engines and SRMs on the candidate vehicles. Specifically, they represent: a) LH2/LOX engines (Delta IV-H), b) RP1/LOX engines (Atlas V Heavy), c) A-50/NTO engines (Titan II), d) LH2/LOX engines with SRMs (Delta IV M+ (5,4), and e) RP1/LOX engines with SRMs (Atlas V 551/552). The emissions from other candidate vehicles would be within the emission envelope of these five vehicles.

Table 4.1-7 Air Emissions (tons) Per Launch of Candidate Vehicles Into Lowest 3,000 Feet of Atmosphere

Vehicle	Pollutant					
	VOC	NO_X	CO	SO_2	PM_{10}	HCl
Delta IV-H	0	1.6	0	0	0	0
Atlas V Hvy	0	1.2	0	0	0	0
Titan II	0	0.04	0.06	0	0	0
Delta IV M+	0	0.71	0.0054	0	10	5.1
Atlas V 551/552	0	1.1	0.01	0	15	7.8

Sources: USAF, 2000a & USAF, 1987

4.1.5.2.1.1 CCAFS AND KSC

The maximum ground-level concentrations resulting from nominal launches of Atlas V and Delta IV vehicles from CCAFS are shown in Table 4.1-8. These concentrations of rocket exhaust emissions are predicted by REEDM for a meteorological condition where a low altitude temperature inversion traps the launch cloud near ground. Other meteorological conditions would yield different results.

Table 4.1-8 Maximum Downwind Concentrations for Nominal Launches at CCAFS

Vehicle	Averaging Time	NOX (ppm)	HCl (ppm)	Al_2O_3 (mg/m^3)
Atlas V 551/552	Instantaneous	0.000	0.466	1.051
	60-minute	0.000	0.030	0.045
Delta IV M+(5,4)	Instantaneous	0.000	0.634	0.996
	60-minute	0.000	0.029	0.040
Atlas V Heavy	60-minute	0.025	N/A	N/A
Delta IV H	30-minute	0.012	N/A	N/A

Sources: USAF, 1998; USAF, 2000a Appendix T

4.1.5.2.1.2 VAFB

The maximum ground-level concentrations resulting from nominal launches of Atlas V and Delta IV vehicles from VAFB are shown in Table 4.1-9. These REEDM predictions are based on the meteorological cases in Appendix T.

Table 4.1-9 Maximum Downwind Concentrations for Nominal Launches at VAFB

Vehicle	Averaging Time	NOX (ppm)	HCl (ppm)	Al2O3 (mg/m3)
Atlas V 551/552	Instantaneous	0.000	1.896	5.401
	60-minute	0.000	0.067	0.381
Delta IV M+ (5,4)	Instantaneous	0.000	1.270	13.499
	60-minute	0.000	0.045	1.032
Atlas V Heavy	60-minute	0.025	N/A	N/A
Delta IV H	30-minute	0.012	N/A	N/A

Sources: USAF, 1998; USAF, 2000a Appendix T

4.1.5.2.2 LAUNCH VEHICLE PROPELLANT SPILLS

The potential for an accidental release of liquid propellants would be minimized by adherence to applicable safety procedures as specified in EWR 127-1 (Eastern and Western Range Safety Regulations). All spills would be managed in accordance with SPCC plans. Liquid propellants, typically either RP-1 and liquid oxygen or A-50 and NTO, would be stored in tanks near the launch pad within cement containment basins designed to retain 110 percent of the storage tank volumes. Propellant spills from the launch vehicle would be channeled into sealed concrete catchment basins and disposed of according to the appropriate Federal and State regulations. Propellant loading operations would be postponed if range safety models predict that a potential propellant spill would result in a toxic hazard to the public or unprotected personnel.

4.1.5.2.2.1 CCAFS AND KSC

The most severe propellant spill accident scenario at CCAFS related to launch of the candidate vehicles would be the release of the entire Delta II second-stage load of nitrogen tetroxide. Ground-level NO_2 vapor concentrations resulting from this size spill are predicted to be reduced to less than 5 ppm at 150 meters (about 500 ft) downwind of the spill site, and to less than 1 ppm at 300 meters (about 1,000 ft) downwind (BOEING, 1996).

4.1.5.2.2.2 VAFB

The most severe propellant spill accident scenario at VAFB involving a candidate launch vehicle would be the release of the entire Titan II load of nitrogen tetroxide at the launch pad. Under adverse weather conditions, it was predicted that a plume from this size spill could reach as far as 4 kilometers (2.5 miles) before nitrogen oxide concentrations are lowered to 5 parts per million (ppm), and could travel several miles farther before being lowered to 1 ppm (USAF, 1988).

4.1.5.2.3 LAUNCH FAILURES

4.1.5.2.3.1 CCAFS AND KSC

An in-flight or on-pad failure of the Delta II launch vehicle represents the greatest toxic hazard at CCAFS resulting from the launch failure of a candidate vehicle. This is due to the load of hypergolic propellants (hydrazines and NTO) on the Delta II second stage. Table 4.1-10 displays the chemical concentrations resulting from a Delta II fireball (deflagration) as predicted by REEDM. Although much of the hypergolic propellants would be consumed in the deflagration fireball, emissions would include hydrazine (N_2H_4), unsymmetrical dimethylhydrazine (UDMH), NO_2, ammonia (NH_3), and nitric acid (HNO_3). Any

nitrogen tetroxide (NTO) that does not react with other propellants is predicted by REEDM to convert to nitrogen dioxide (NO_2).

Table 4.1-10 Peak Concentrations and 60-Minute Mean Concentrations for a Catastrophic Launch Pad Failure (Deflagration) of the Delta II 7925 at CCAFS during Worst Case Meteorological Conditions

Exhaust Cloud Constituent	Peak Concentration (ppm)	Maximum 60-Minute Mean (ppm)	Distance From LC-17 Peak/Mean (kilometers)
CO	8.701	0.255	10/12 (6.25/7.5 mi)
UDMH	0.044	0.001	10/12 (6.25/7.5 mi)
HCl	0.511	0.015	10/12 (6.25/7.5 mi)
NH_3	0.260	0.008	10/12 (6.25/7.5 mi)
NO_2	0.660	0.019	10/12 (6.25/7.5 mi)
N_2H_4	0.016	No N_2H_4 Found	10/-- (6.25/-- mi)
Al_2O_3*	0.405 mg/m^3	0.012 mg/m^3	10/12 (6.25/7.5 mi)
HNO_3	0.002	No HNO_3 Found	14/-- (8.75/-- mi)

Source: Data acquired from (NASA, 1998) to document predicted concentrations resulting from a Delta II fireball.
*Al_2O_3 concentrations are in mg/m^3 because the aluminum oxide is a particulate rather than a gas.
Note that current naming convention would refer to Delta II 7925 as Delta II 2925.

4.1.5.2.3.2 VAFB

An in-flight or on-pad failure of a Titan II represents the greatest toxic hazard at VAFB from the launch failure of a candidate vehicle. This is due to the large quantities of hypergolic liquid propellants used on the vehicle. Residual hydrazine fuel and NTO oxidizer that survive the deflagration fireball are believed to thermally decompose or vaporize. Ammonia and methane are predicted to form as byproducts of the hydrazine and UDMH thermal decomposition. Further atmospheric decay of vaporized UDMH is predicted to form nitrosodimethylamine (NDMA) and formaldehyde dimethylhydrazone (FDA). The concentration predictions for these and other chemicals predicted to result from a Titan II launch failure are listed in Table 4.1-11 (NASA, 1998).

Table 4.1-11 Peak Concentration and 60-Minute Mean Concentration Predictions for Titan II Launch Abort Emissions at VAFB Using a Hypothetical No Wind Shear Meteorological Profile

Exhaust Cloud Constituent	Peak Concentration (ppm)	Maximum 60-Minute Mean (ppm)	Distance From SLC-4 Peak-Mean (kilometers)
CO	1.59	0.53	9-13 (5.6-8.1 mi)
CO_2	0.98	0.33	9-13 (5.6-8.1 mi)
UDMH	1.24	0.41	9-13 (5.6-8.1 mi)
NH_3	7.51	2.50	9-13 (5.6-8.1 mi)
NO_2	19.44	6.39	9-13 (5.6-8.1 mi)
N_2H_4	0.38	0.11	8-11 (5-6.785 mi)
NDMA	Trace*	Trace*	No Data
FDH	0.03	0.01	13-21 (8.1-13.1 mi)
HNO_3	0.66	0.33	13-21 (8.1-13.1 mi)

Source: Data acquired from (NASA, 1998) to illustrate predicted concentrations resulting from a Titan II abort.
*Trace quantities are <0.01.

4.1.5.3 Clean Air Act Conformity

Clean Air Act (CAA) Conformity Applicability Analyses for EELV operations (i.e., the largest of the launch vehicles considered in this action) have established that EELV operations meet de minimis requirements and are not considered a regionally significant action. (USAF, 2000a) Table 4.1-7 in this EA illustrates the VOC and NOx emmissions from the five largest ELVs considered in this EA. The EELV vehicles represent 4 of the 5 vehicles and emit more than an order of magnitude more ozone precursors than the Titan II. Therefore, use of any other ELV considered in this EA will be equally or less polluting than the EELV ELVs. Hence, the emissions from any launch vehicle considered in this EA are de minimus and are not considered regionally significant. Review of the CAA Conformity Analyses for DSCS (USAF, 1995) and EOS (NASA, 1997b) payload EAs documents that those payload processing operations contribute only a small fraction (~ 1/25) of the emissions associated with the EELV launch and operations. The fraction-of-a-ton quantity exemplified by DSCS and EOS payload processing EAs represent the quantities and processes considered routine in this EA and are de minimis and not regionally significant. Therefore, further CAA conformity analyses pursuant to 40 CFR 93.153(c) are not required, and this action does not require a new CAA Conformity Determination. As documented previously in the EELV conformity analysis, SBCAPCD's Rule 702 is adopted from the federal General Conformity regulation, and the EELV conformity analysis satisfied both the state and the federal requirements. This EA considers launches within the approved and analyzed launch rates, hence does not add any launches or their impacts. As stated in Paragraph 2.2, checklist Item 4, a proposed mission that would exceed the approved launch rates must consult with the appropriate launch support organizations for further analysis.

VAFB is located within the SBCAPCD, which has been in non-attainment for the ozone ambient air quality standard. Santa Barbara County has attained the federal one-hour standard for ozone, but the County is still designated a serious non-attainment area for ozone until the US EPA re-designates it to attainment. The government is required to make a formal determination as to whether operations comply with the General Conformity Rule of the Clean Air Act. Section 176 (c) requires all Federal agencies or agency-supported activities to comply, where applicable, with an approved or promulgated State Implementation Plan (SIP) or Federal Implementation Plan (FIP). Conformity means compliance with a plan's purpose of attaining or maintaining the NAAQS. Specifically, this means ensuring the activity would not: 1) cause a new violation of the NAAQS; 2) contribute to an increase in the frequency or severity of existing NAAQS violations; or 3) delay the timely attainment of any NAAQS, interim milestones, or other milestones to achieve attainment (USAF, 1995b)." The rule does not apply to actions where the total direct and indirect emission of nonattainment criteria pollutants do not exceed threshold levels for criteria pollutants established in 40 CFR 93.135(b). In addition to meeting de minimus

requirements, a federal action is considered regionally significant when the total emissions from the action equal or exceed 10 percent of the air quality control area's emission inventory for any criteria pollutant. If a federal action meets de minimis requirements and is not considered a regionally significant action, then it is exempt from further conformity analyses pursuant to 40 CFR 93.153(c).

Launch vehicles are not stationary sources, and, therefore, the exhaust from ELVs is not subject to stationary emissions permits. Sections 4.1.2.2, 4.1.5.2 and 4.1.6.2 discuss the potential impacts of launch vehicle exhaust on public safety, air quality, and stratospheric ozone.

The only emissions from spacecraft processing that would potentially impact NAAQS would be very small amounts of volatile organic compounds (VOCs), which are precursors to ozone formation, and relatively minor NO_x emissions from spacecraft propellant transfers. The use of VOC-containing products (including solvents, coatings, and adhesives) is regulated by the SBCAPCD. These regulations assure that any release of volatile organic compounds (VOCs) would be very small in comparison to launch vehicle releases, and hence no analysis has been required by regulation. NO_x emissions similarly would be very small in comparison to launch vehicle emissions and hence have not been considered so long as launch vehicle emissions do not approach minimum threshold limits (de minimis limits). A CAA Conformity Determination is not needed for CCAFS because it is located in an area that is in full attainment with NAAQS.

The proposed launches of routine payload spacecraft would not increase previously approved launch rates or utilize launch systems beyond the scope of approved programs at VAFB. CAA general conformity analyses have previously been completed for the licensing of the proposed sites.

4.1.6 Stratospheric Ozone Layer

4.1.6.1 Spacecraft and Launch Vehicle Processing

Ozone-depleting substances (ODSs), commonly used at CCAFS and VAFB in cooling systems and fire-suppression systems, may be utilized during pre-launch processing of routine payload spacecraft and launch vehicles. Any ODS use would be accomplished in accordance with Federal, State, and local laws regulating ODS use, reuse, storage, and disposal. Release of materials other than propulsion system exhaust would be limited to inert gases. Since preparation and launch of routine payload spacecraft would result in no release of ODSs into the atmosphere, there would be no impact on stratospheric ozone.

4.1.6.2 Launch Vehicle Emissions

The Clean Air Act does not list rocket engine combustion emissions as ODSs, and therefore rocket engine combustion emissions are not subject to limitations on production or use. While not regulated, rocket engine combustion is known to produce gases and particles that reduce stratospheric ozone concentrations locally and globally (WMO, 1991).

The propulsion systems utilized by routine payload launch vehicles emit a variety of gases and particles directly into the stratosphere. A large fraction of these emissions, CO_2 for example, is chemically inert and do not affect ozone levels directly. Other emissions, such as HCl and H_2O, are not highly reactive, but they do have an impact on ozone globally since they participate in chemical reactions that help determine the concentrations of ozone destroying gases known as radicals. A small fraction of rocket engine emissions are the highly reactive radical compounds that attack and deplete ozone in the plume wake immediately following launch. Particulate emissions, such as Al_2O_3 (alumina) and carbon (soot), may also be reactive in the sense that the surfaces of individual particles enable important reactions that would not proceed otherwise.

Table 4.1-12 presents the emissions from propulsion systems of the type utilized by routine payload launch vehicles that could most affect stratospheric ozone, grouped according to oxidizer and fuel combination: solid propellant using ammonium perchlorate and aluminum, LOX and liquid hydrogen, LOX and kerosene, and Aerozine-50 and nitrogen tetroxide. Table 4.1-12 does not account for all emissions, only those most relevant to ozone chemistry. For example, all of the systems emit CO_2, but it does not play a direct role in ozone chemistry in the stratosphere.

The relative emission rate (mass of emitted compound per mass of propellant consumed) has not been accurately determined for all of the compounds listed in Table 4.1-12. Rocket engine combustion computer models have been used to estimate the emission rates for some compounds (AEROSPACE, 1994). Direct measurements using high altitude aircraft have validated the model predictions in some cases (ROSS, 2000). The combustion models have not yet been used to estimate the rates for some important compounds, hydrogen oxides (HO_x) for example, although theoretical considerations suggest they should be present in the exhaust in small quantities.

Table 4.1-12 Launch Vehicle Emissions

Propellant	Launch Vehicles	Emissions
Solid	Atlas series, Delta series Taurus, Pegasus, Athena	H_2O, HCl, Clx, NOx, [HOx], alumina (Al_2O_3)
LOX/H_2	Delta IV	H_2O, [NOx, HOx]
LOX/kerosene	Atlas series, Delta II, Delta III	H_2O, [NOx, HOx], soot (Carbon), sulfate (H_2SO_4)
NTO/Aerozine-50	Titan II	H_2O, NOx, [HOx, soot]

1. alumina, soot, and sulfate particles less than 5 microns
2. NOx includes NO, NO_2, NO_3
3. HOx includes OH, OH_2,
4. Clx includes Cl, Cl_2, and ClO
5. Brackets denote compounds that have not yet been measured but are expected to be present

The impact of rocket emissions is conveniently separated into an immediate local response following each launch and a long-term global response that reflects the steady, cumulative influence of all launches. Fast chemical reactions between reactive plume gases, particles, and the surrounding air cause the local response. This can result in 100% ozone loss (ROSS, 2000). This phase lasts for several days until the reactive exhaust gases have been largely deactivated and the plume has substantially dispersed. The ozone loss in this phase, while dramatic, does not likely contribute significantly to the global impact (DANILIN, 2001), at least for SRM emissions.

The global response is driven by the accumulation of all gas and particulate emissions over a long period of time after the exhaust has been mixed throughout the stratosphere. An approximate steady-state is achieved as exhaust from newer launches replaces the exhaust from older launches which is removed from the stratosphere by the global atmospheric circulation, a process that takes about 3 years. The emitted compounds add to the natural reservoirs of reactive gases and particle populations that control ozone amounts.

Of the four propellant combinations that would be utilized by routine payload launch vehicles and listed in Table 4.1-12, only SRM emissions have been studied in depth. The local and global impact of chlorine emitted by SRMs has been extensively measured and modeled and is relatively well understood (i.e. WMO, 1991; WMO, 1999). The conclusions and findings of the various studies have been incorporated into the NEPA analysis of routine payload launch vehicles (Appendix A). The impact of alumina and soot particulate, NOx, and HOx emissions are less well understood than chlorine emissions. Laboratory and plume data suggest that the impact of alumina particulate is not substantial, although some uncertainty remains. For some plausible model assumptions, the global impact of alumina particulate is comparable to the chlorine impact (JACKMAN, 1998). NOx and HOx emissions are small, and their impacts are

likely not significant compared to chlorine and alumina, although they have not been included in models.

In contrast to SRMs, the impacts of liquid propellant rocket engine emissions have not been extensively studied. Detailed computer models of liquid engine emissions have not yet been developed. Laboratory and plume measurements of relevant compounds and chemical reactions have not been made. Finally, the global atmospheric models that have been successfully applied to SRM emissions have not been applied to liquid emissions. The few findings that have been published highlight the reactive gas and soot emissions of kerosene fueled engines and associated potential for ozone impacts (ROSS, 2000; NEWMAN, 2001). Because of the scant data and lack of modeling tools, it is not possible to estimate the impact of liquid propellant systems with the same degree of confidence as has been done for solid propellant systems. Further research is required before the stratospheric impacts of LOX/H_2, LOX/kerosene, and NTO/A-50 combustion emissions can be quantified.

Among the routine payload launch vehicles, the Atlas V 551 emits the greatest amount of SRM exhaust into the stratosphere. In order to estimate an upper limit on ozone loss, we assume that three routine payload spacecraft would be launched each year using the Atlas V 551. The global ozone loss associated with SRM emissions from steady state Atlas V 551 operations is about 0.0077% (i.e., (30+15) * 0.000017) per launch (USAF, 2000a). Recalling that the ozone impact of kerosene fueled rocket engines is not known and in keeping with our interest in estimating an upper limit, we also assume that the ozone loss caused by the Atlas V liquid propellant engines equals the ozone loss caused by the SRMs. Thus the global ozone loss from routine payload launches would not exceed 0.0046% (i.e., 0.0077 per launch * 3 launches per year * 2 factor for soot). The present state of the stratosphere is characterized by global ozone loss of about 4%, caused by past use of chlorofluorocarbons (CFCs) and other controlled materials (WMO, 1999). Routine payload launches would cause an additional ozone loss of not more than 0.0046% to the already existing 4% loss and would therefore increase the preexisting loss by less than one eighth of one percent.

4.1.6.3 Reentry Debris Particles

This section discusses the potential impact of reentry debris upon stratospheric ozone. Orbital debris and reentry of debris have other potential environmental impacts and hazards that are discussed in Section 4.1.8. An emerging area of concern is the potential influence of metallic particulate generated as reentering spacecraft and upper stages vaporize during atmospheric entry. The vaporized material condenses as micron-sized particles that populate the upper atmosphere. A class of metallic particles that have been attributed to this source increased in stratospheric concentration by a factor of ten between 1976 and 1984 (ZOLENSKY, 1989). The sources of these particles and their potential to affect stratospheric ozone is not understood and further research is required to determine if they represent a substantial potential to impact stratospheric ozone. A small number of routine payload spacecraft may be deorbited at their end of life as part of the requirement to control orbital debris (Paragraph 4.1.8) and a fraction of their structure would contribute to the population of particles attributed to entry vaporization. Whatever the impact of these particles, the small number of possible routine payload reentry events insures that they would not add, substantially, to the existing stratospheric burden and, so, would not have a substantial impact on ozone.

4.1.7 Noise and Sonic Boom

An impact may be considered substantial if (1) the proposed action increased substantially the ambient noise level for adjoining areas and (2) the increased ambient noise affected the use of the adjoining areas. NASA considers noise (including sonic boom) impacts on endangered species, marine mammals, historic structures, or any other protected property.

4.1.7.1 Spacecraft Processing Impacts

The processing of the proposed spacecraft would not produce any substantial amount of noise outside of the processing facilities. The facilities employed for spacecraft processing, however, may generate moderate amounts of industrial noise due to operating machinery, generators, public address systems, and similar typical industrial systems. All such systems are subject to OSHA or AFOSH regulations, and hearing protection would be utilized if and when required. The standard for noise, such as from generators, is based on the Noise Control Act of 1972 (NCA) (P.I. 92-574), as amended. State and local standards serve as a guide if these are at least as stringent as Federal standards. There would not be an increase in the noise at the assembly site. Impact on the environment outside of the facility would be minimal and the potential for overall environmental impact on biota or personnel is not considered substantial.

4.1.7.2 Launch Vehicle Impacts

The noise and sonic booms from launches are typical of routine operations at CCAFS and VAFB. Noise from launch-related activity appears to be an infrequent nuisance rather than a health hazard to the surrounding community. In the over 50-year history of space-launch vehicle operations from CCAFS, there have been no problems reported as a result of sonic booms. This outcome is probably because the ascent track of all vehicles and the planned reentry of spent suborbital stages are over the ocean. Thus this favorable trajectory focuses the sonic booms away from land areas (BOEING, 1996). The only sonic boom issue at VAFB relates to possible impacts on wildlife on the Channel Islands. Sonic boom impacts on wildlife at CCAFS and VAFB are discussed in Section 4.1.9.

Peak launch noises for all proposed launch vehicles would be experienced for a very brief time period (approximately five seconds), and therefore, are not expected to exceed EPA or OSHA/AFOSH requirements and recommendations (Table 4.1-13). Moreover, any personnel at the launch site exposed to high noise levels would wear protective gear.

Table 4.1-13 Typical Launch Vehicle Noise Levels at 1.6 kilometers (1 Mile)

Launch Vehicle	Maximum Noise Level (dBA)	Standard
Titan II	112	OSHA Requirements
Delta II	110	Not to exceed 115 dBA for > 15 min. Not to exceed 90 dBA for an 8-hr day
Taurus	100	EPA Recommendation
Athena	99	Not to exceed 70 dBA for the general public as a 24-hr average

Source: Data acquired from (USAF, 1995a) to compare measured to regulated noise levels.

4.1.8 Orbital and Reentry Debris

4.1.8.1 Spacecraft Impacts

Orbital debris as a result of U.S. and foreign space activities may reenter the Earth's atmosphere. NASA's policy is to employ design and operations practices that limit the generation of orbital debris, consistent with mission requirements and cost-effectiveness. NASA Safety Standard (NSS) 1740.14 "Guidelines and Assessment Procedures for Limiting Orbital Debris" requires that each program or project conduct a formal assessment for the potential to generate orbital debris. General methods to accomplish this policy include:

- Depleting on-board energy sources after completion of mission,
- Limiting orbit lifetime after mission completion to 25 years or maneuvering to a disposal orbit,
- Limiting the generation of debris associated with normal space operations,
- Limiting the consequences of impact with existing orbital debris or meteoroids,
- Limiting the risk from space system components surviving reentry as a result of post-mission disposal, and
- Limiting the size of debris that survives reentry.

The routine payloads encompassed in this FEA would comply with all requirements of NPD 8710.3, "Policy for Limiting Orbital Debris Generation" and NSS 1740.14. A debris assessment would be prepared as required by this policy.

If a malfunction causes an unplanned reentry of the spacecraft during launch, pieces of the spacecraft could survive reentry and impact the ground. Impact of these pieces could produce injuries or fatalities. Over the period 1958 to 1991, NASA reported that 14,831 payloads and debris objects reentered the atmosphere (NASA 1991). There have been no reports of injuries or fatalities from reentering objects. The potential for collision between routine payload spacecraft and another spacecraft or orbital debris is also a concern. The chance of a collision between a typical spacecraft (10 m^2 or 108 ft^2 cross-sectional area) and a large debris object is estimated at 0.1 percent over its 10-year functional lifetime. This is greater than the risk of impacts with large-sized meteoroids (NRC, 1995).

Environmental and safety impacts resulting from the normal and errant burnout of launch vehicle stages would be controlled at CCAFS and VAFB in accordance with EWR 127-1 "Range Safety Requirements". EWR127-1 requires that a trajectory analysis predict the instantaneous surface impact point (IIP) at any moment during launch for either normal flight or debris from a flight terminated by range safety action. This IIP would be overlaid on range maps indicating

populated or environmentally sensitive areas, and a launch corridor would be developed. During the actual launch, tracking data and IIP plots would be monitored to assure the launch trajectory stays within the corridor. If a flight approaches corridor limits, it would be destroyed by Range Safety. This assures that spent stages or debris would only impact broad ocean areas cleared of shipping or air traffic. In rare cases, over-flight of land areas might be permitted if population density reduces the potential for human injury to less than 30×10^{-6}.

4.1.8.2 Launch Vehicle Impacts

The implementation of launch vehicle mitigation measures is discussed in their individual NEPA documents. A listing of this documentation is provided in Appendix A. By way of summary, lower stages and SRMs would burn out and impact in the open ocean. Upper stages that achieve Low Earth Orbit (LEO) are usually programmed after spacecraft separation to burn residual propellants to depletion in a vector that would result in reentry in two to three months. These objects would be consumed by reentry heating, but some pieces would be expected to survive reentry and would be tracked to assure harmless impact. Upper stages going to higher orbits are not subject to controlled reentry and contribute to debris. Their location would be tracked to permit avoidance with future launch trajectories. However, the accumulation of such debris is of international concern and mitigation measures are under study.

4.1.9 Biological Resources

An impact to biological resources may be considered significant if the Federal action would impact a threatened or endangered species, substantially diminish habitat for a plant or animal species, substantially diminish a regionally or locally important plant or animal species, interfere substantially with wildlife movement or reproductive behavior, and/or result in a substantial infusion of exotic plant or animal species.

Any action that may affect Federally-listed species or their critical habitats requires consultation with the U.S. Fish and Wildlife Service (USFWS) under Section 7 of the Endangered Species Act of 1973 (as amended). Also, the Marine Mammal Protection Act of 1972 prohibits the taking of marine mammals, including harassing them, and may require consultation with the National Marine Fisheries Service (NMFS). The NMFS is also responsible for evaluating potential impacts to Essential Fish Habitat (EFH) and enforcing the provisions of the 1996 amendments to the Magnuson-Stevens Fishery Conservation and Management Act (MSFCMA) (50 CFR 600.905 et seq.). The USFWS and the NMFS have previously reviewed NEPA documentation for the proposed launch vehicles at CCAFS and VAFB and have specified required launch restrictions and other impact mitigation measures. A listing of applicable NEPA documents

is provided in Appendix A. No payload processing or launch activities connected with this proposed action have been identified that would require permits and/or mitigation measures beyond the baseline permits and mitigation measures already necessary or in coordination for VAFB and CCAFS launches.

4.1.9.1 Spacecraft Processing Impacts

Processing of routine payloads would occur in existing facilities and payloads would be transported on existing roadways. Adjacent habitats would not be disturbed. Exterior lighting at all facilities used for spacecraft processing at CCAFS would comply with established lighting policy for minimizing disorienting effects on sea turtle hatchlings.

4.1.9.2 Launch Vehicle Impacts

Launch activities could have some small impacts near the launch pad associated with fire and acidic deposition. Minor brush fires are infrequent by-products of launches and are usually contained and limited to ruderal vegetation within the launch complexes. Past singeing has not permanently affected the vegetation near the pads. Wet deposition of HCl, caused by rain falling through the SRM exhaust cloud, could damage or kill vegetation locally. Wet deposition is not expected to occur outside the pad fence perimeter due to the small initial size and rapid dissipation of the ground cloud (BOEING, 1996).

During a nominal launch, the launch vehicle and spacecraft would be carried over the Cape Canaveral or Vandenberg coastal waters and on into orbit without impacts of any kind on the marine life or habitat. Only in the event of an early launch abort or failure where the spacecraft and launch vehicle debris would fall into this area would there be a potential impact. Launch vehicle debris from a liquid propellant vehicle is considered a negligible hazard because virtually all hazardous materials are consumed in the destruct action or dispersed in the air, and only structural debris remains could strike the water. The exception arises when solid rocket motors with residual propellant impact the ocean. This introduces ammonium perchlorate oxidizer into the water by leaching from the rubber-base propellant over a period of time. The low toxicity of this compound together with the slow release into the water does not present a substantial health hazard to marine life.

Even in a destruct action, the spacecraft often survive to impact the water essentially intact, presenting some potential for habitat impact. This potential arises from the fact that most spacecraft carry onboard hypergolic propellants, which are toxic to marine organisms. Specifically, these are either hydrazine (N_2H_4) or monomethylhydrazine (MMH) fuel (up to 1000 kg or 2200 pounds in the envelope case) and nitrogen tetroxide (NTO) oxidizer (up to 1200 kg or 2600 pounds in the envelope case). A lesser hazard may exist from small amounts of battery electrolyte also carried on all spacecraft, but the risk from electrolyte is

far smaller due to small quantities, lower toxicity and more rugged containment. Hence analysis will focus on the hypergolic propellants.

The reliability of the Delta launch vehicle is estimated to be approximately 98 percent, the highest demonstrated reliability of any American expendable launch vehicle. Reliabilities of the other vehicles are not far behind. Using the Delta case of three launches per year, its 0.98 probability of success for each launch, and an assumption that all failures result in ocean impact of the spacecraft, the probability of one failure in three launches is calculated to be 0.06 ($3 \times 0.98^2 \times 0.02$). Hence, it is not likely that a spacecraft will impact in the ocean. Depending on the precise timing and failure mechanism, several scenarios are possible if such an event did occur:

1. The entire spacecraft, with onboard propellants, is consumed in a destruct action

2. The spacecraft is largely consumed in the destruct action, but residual propellant escapes and vaporizes into an airborne cloud

3. The spacecraft survives to strike the water essentially intact, whereupon the propellant tanks rupture, releasing liquid propellants into surface waters

4. The spacecraft survives water impact without tank rupture and sinks to the bottom, but leaks propellant into the water over time

The probability of any one of these scenarios is unknown, but only the last two would offer potential impact to marine life or habitat. No. 3 would release the entire propellant load into surface waters, producing the highest concentrations (assuming no combustion on contact of fuel with oxidizer) whereas No. 4 would produce lower concentrations over time. Although No. 3 may expose a few individuals to acute concentrations, it is believed that No. 4 would expose a greater number of individuals to toxic concentrations as feeding populations investigate or travel by the sunken satellite debris.

The toxicology of hydrazine, MMH and nitrogen tetroxide with marine life is not well known. Nitrogen tetroxide almost immediately forms nitric and nitrous acid on contact with water, and would be very quickly diluted and buffered by seawater; hence would offer negligible potential for harm to marine life. With regard to hydrazine fuels, these highly reactive species quickly oxidize forming amines and amino acids, which are beneficial nutrients to simple marine organisms. Prior to oxidation, there is some potential for exposure of marine life to toxic levels, but for a very limited area and time. A half-life of 14 days for hydrazine in water is suggested based on the unacclimated aqueous biodegradation half-life (Howard, 1991).

An anomaly on the launch pad would also present potential impacts to biological resources due to the possibility of extreme heat and fire, from percussive effects of the explosion, and from solid propellant fragments that might impact in

surface waters. The explosion could injure or kill wildlife found adjacent to the launch pad or within debris impact areas. Potential fires started from the anomaly could result in a temporary loss of habitat and mortality of less mobile species. A mishap downrange would occur over the open ocean and would not likely jeopardize any wildlife, given the relatively low density of species within the surface waters of these open ocean areas (USAF, 1998). Debris from launch failures has the potential to adversely affect managed fish species and their habitats in the vicinity of the project area. Ammonium perchlorate in the SRM fuel used in the Proposed Action contains chemicals that, in high concentrations, have the potential to result in adverse impacts to the marine environment. After consultation with the NMFS, the Air Force found "no greater than minimal adverse effects" to essential fish habitat under NMFS regulations. (USAF, 2000b)

4.1.9.2.1 CCAFS AND KSC

NASA has mapped the effects on local vegetation of 14 Delta, 20 Atlas, and 8 Titan launches from CCAFS (SCHMALZER, 1998). Vegetation scorching has been limited to small areas (less than a hectare (2.5 acres)) within 150 m (495 ft) of the launch pad for Atlas and Titan launches. Acid and particulate deposition for Delta launches has extended less than 1 km (0.6 mi) from the launch pad and affected relatively small areas (up to 46 hectares (114 acres)). Continuous acid deposition has not exceeded 1 km (0.6 mi) from the launch pad for Titan launches. However, isolated acid deposition has occurred up to 9.3 km (5.8 mi) from the launch pad under certain meteorological conditions. Particulate deposition from Titan launches has occurred over larger areas (2,366 hectares or 5847 acres) and up to 14.6 km (9.1 mi) from the launch pad. No discernable vegetation or other environmental damage appears to be caused by this particulate deposition.

Localized fish kills occur after most Space Shuttle launches as a direct result of surface water acidification. However, the smaller launch clouds produced by Delta, Atlas, and Titan launches have not produced substantial acidification and have resulted in no fish kills. Without substantial acidification of surface waters, any aluminum oxide deposited in surface waters would remain insoluble and nontoxic to the biota. No animal mortality has been observed at CCAFS that could be attributed to Delta, Atlas, or Titan launches (SCHMALZER, 1998).

Florida scrub jays and Southeastern beach mice occur in the vicinity of launch facilities at CCAFS. A small potential exists that individuals of these species would be directly impacted by launch operations. Previous environmental analyses (USAF, 1995a) concluded that impacts to these species are expected to be minimal. The behavior of scrub jays observed after Delta, Atlas, and Titan launches has been normal, indicating no noise-related effects (SCHMALZER, 1998). The proposed action's average rate of three launches per year spread over a number of launch sites would not be expected to substantially impact Florida scrub jay or southeastern beach mice.

Night lighting at the launch pads has been a concern at CCAFS because of the potential for sea turtle hatchlings at the beach to be drawn toward the lights instead of toward the surf. This has been mitigated by a 45th Space Wing Instruction SWI32-7001 "Exterior Lighting Management" which has been implemented by a series of management plans specific to all active launch complexes as well as the CCAFS Industrial Area. These plans require the use of low-pressure sodium light fixtures, shielding, and special light management steps where lights are visible from the beach areas. Specifically covered are Launch Complexes 17, 20, 36A/B, ITL area, 40, 41 (EELV), 46, 37 (EELV), the Port Canaveral, and Industrial Areas.

Sonic booms created by launches from CCAFS would occur over the open Atlantic Ocean. The effects of a sonic boom on whales or other open ocean species are not known. Because these sonic booms are infrequent, the marine species in the ocean's surface waters are present in low densities (although spring and fall migration will see periodic groups of migrating whales that follow the coastline), and the sonic boom footprint lies over 38 km (30 mi) from CCAFS, the sonic booms from launches are not expected to negatively affect the survival of any marine species (USAF, 1998).

4.1.9.2.2 VAFB

Substantial impacts to local vegetation from launch operations have not been detected at VAFB. Since VAFB has a high hazard risk for wildfire, a launch anomaly could present potential impacts to vegetation. The launch response teams at VAFB would mitigate the effects of fires started by launch anomalies.

Launch noise impacts on endangered species of birds (Snowy Plover and Least Tern) in the dune area adjacent to SLC-2 have been analyzed. After consultation with USFWS, mitigation measures have been developed to protect these species from impacts from SLC-2 activities (NASA, 1993a). Formal consultations with the USFWS have resulted in a no jeopardy opinion, stating that Taurus is allowed to launch from SLC-6 once during the combined nesting period of the Snowy Plover and Least Tern, subject to compliance with certain mitigation requirements (USAF, 1993). The mitigation requirements are under review. Launch noise at levels as low as 80 dBA caused a short-term (30-minute) abandonment of a pinniped haul-out area at VAFB (USAF, 1997). However, short-term haul-out area abandonment has not caused noticeable impacts on the pinniped populations at these locations. Therefore, effects from launches would be temporary and minor, and would not be expected to negatively affect these populations. Launch noise effects on cetaceans appear to be somewhat attenuated by the air/water interface. The cetacean fauna in the area have been subjected to sonic booms from military aircraft for many years without apparent adverse effects (USAF, 1997).

The ascent track of some VAFB launches pass over the Channel Islands, which are inhabited by protected marine mammals (seals and sea lions). Due to

potential disturbances prohibited under the Marine Mammal Act, take permits from the National Marine Fisheries Service (NMFS) are either in place or are being developed to accommodate possible impacts from sonic booms for the proposed launch vehicles. Monitoring and mitigation plans developed by Spaceport Systems International and McDonnell Douglas Aerospace (now Boeing) identified comprehensive monitoring and mitigation activities that would be performed on behalf of all users. Individual users would not be expected to perform natural resource monitoring for their missions, instead this is provided as a launch support service.

4.1.10 Cultural Resources

Impacts to cultural resources may be considered significant if the Federal action resulted in disturbance or loss of values or data that qualify a site for listing in the NRHP; substantial disturbance or loss of data from newly discovered properties or features prior to their recordation, evaluation and possible treatment; or substantial changes to the natural environment or access to it such that the practice of traditional culture or religious activities would be restricted.

The proposed action would use existing facilities for payload processing, existing roadways for payload transportation, and existing launch facilities. Since no surface or subsurface areas would be disturbed by construction activities, no substantial archeological, historic, or other cultural properties would be affected by the proposed action. Full compliance with Section 106 of the National Historic Preservation Act would occur for all proposed actions.

4.1.11 Economic Factors

Launching the proposed spacecraft would have a negligible, if any, impact on local communities, since no additional permanent personnel are expected beyond the current CCAFS and VAFB staff. The action would cause no additional adverse impacts on community facilities, services, or existing land uses.

4.1.12 Environmental Justice

EO 12898 directs Federal agencies to identify and address disproportionately high and adverse human health or environmental effects of their programs, policies, and activities on low-income populations and minority populations in the United States. Given the launch direction and trajectories of the proposed spacecraft and protection provided by range safety regulations, there would be little or no potential for substantial environmental effects on any human populations outside CCAFS and VAFB boundaries.

4.1.13 Cumulative Effects

The use of facilities at CCAFS, KSC, and VAFB for processing and launch of routine payloads would be consistent with existing uses and would pose no new impacts. The proposed action includes a variety of launches over a 10-year period. The average number of launches per year would average three per year (one at VAFB and two at CCAFS) of the candidate launch vehicles. This is not a substantial fraction of the National launch manifest, which includes more than 20 launches of ELVs each year.

The number of payloads processed and launched by the proposed action per year would be small when compared to ongoing programs at CCAFS and VAFB. For instance, the EELV program projects 28.3 launches of Delta IV and Atlas V vehicles per year over the next twenty years. This includes annual averages of 10.5 Atlas V and 10.9 Delta IV launches from CCAFS, and 3.3 Atlas V and 3.3 Delta IV launches from VAFB (USAF, 2000a). The Delta III program projects two launches per year from CCAFS (DELTA III 1996). Permits and mitigation measures exist for up to 10 Deltas II launches per year from SLC-2 (NASA, 1994), a maximum of three Titan II launches per year from SLC-4, and a total of 25 launches per year from the California Commercial Spaceport (SLC6 1995). These launch rates would be supplemented by additional launches of Athena, Taurus, and Delta II vehicles at CCAFS; and Taurus and Pegasus launches at VAFB. The proposed launch of three routine payloads per year would not increase previously approved launch rates nor utilize launch systems beyond the scope of approved launch vehicle programs at CCAFS and VAFB.

Since the launch rate for the proposed action would be within the rate previously approved for these vehicles at these launch sites, there would not be any substantial increase in cumulative impact for payload processing and launch. Therefore, the long-term, cumulative effects to the local and regional environment by the proposed action would not be substantial.

4.2 IMPACTS OF ALTERNATIVE ACTIONS

The proposed action includes all spacecraft described by the Routine Payload Checklist and meeting the scientific requirements of the space and Earth exploration objectives. The proposed action also includes all U. S. expendable launch vehicles that are suitable for launching the candidate spacecraft. Therefore, no other alternatives are within the scope of this FEA.

4.3 NO-ACTION ALTERNATIVE

The No-Action alternative would mean that the NASA would not launch scientific spacecraft missions defined as routine payloads using specific criteria and thresholds. NASA would then propose spacecraft missions for individualized

review under the National Environmental Policy Act (NEPA). Duplicate analyses and redundant documentation would not present any new information or identify any substantially different environmental impacts.

5 CHAPTER FIVE – LIST OF PERSONS AND AGENCIES CONSULTED

5.1 PERSONS AND AGENCIES CONSULTED

Randall Rowland, R.E.M.
45 CES/CEVP
1224 Jupiter Street, MS 9125
Patrick Air Force Base, FL 32925-3343

Jane A. Provancha
Dynamac-Program Manager
Conservation Group Leader
Environmental Support Contract
Patrick Air Force Base, FL 32925

R. Michael Willard
Chief, Environmental Compliance
1224 Jupiter Street, MS 9125
Patrick Air Force Base, FL 32925-3343

James Johnston
30 SW Environmental Management
Vandenberg Air Force Base, CA 93437

(THIS PAGE INTENTIONALLY LEFT BLANK)

6 CHAPTER SIX – REFERENCES

AEROSPACE, 1994. Zittel, P. F., *Computer Model Predictions of the Local Effects of Large Solid Fuel Rocket Motors on Stratospheric Ozone*, Technical Report TR-94(4231)-9, The Aerospace Corporation, El Segundo, CA, 1994.

AEROSPACE, 2000a. Record of personal communication between Marty Ross and Norman Keegan of The Aerospace Corporation and Jim Johnson of 30th Space Wing, November 2000.

AEROSPACE, 2000b. Record of personal communication between Marty Ross and Norman Keegan of The Aerospace Corporation and Randall Rowland of 45th Space Wing, November 2000.

AEROSPACE, 2002a. Record of personal communication between Norm Keegan of The Aerospace Corporation and of Michael B. Camardese of 45th Space Wing, February 2002.

AEROSPACE, 2002b. Record of personal communication between Norm Keegan of The Aerospace Corporation and Lawrence w. Spanne 30th Space Wing, February 2002.

AFI 32-7042, 1994. U. S. Air Force, U. S. Air Force Instruction AFI 32-7042. Solid and Hazardous Waste Compliance, 12 May 1994.

AFI 32-7064, 1997. U. S. Air Force, U. S. Air Force Instruction AFI 32-7064. International Natural Resource Management, 01 August 1997.

AFI 32-7080, 1994. U. S. Air Force, U. S. Air Force Instruction AFI 32-7080. Pollution Prevention Program, 12 May 1994.

AFI 32-7086, 1997. U. S. Air Force, U. S. Air Force Instruction AFI 32-7086. HAZMAT Management, 01 August 1997.

AFPD 32-70, 1994. U. S. Air Force, U. S. Air Force Policy Directive 32-70, Environmental Quality, 20 July 1994.

ANSI Z136.1, 2000. American National Standard for Safe Use of Lasers ANSI Z136.1-2000 Revision of ANSI Z136.1-1993, Approved by American National Standards Institute, Inc. Published by Laser Institute of America, 28 June 2000.

ANSI Z136.6, 2000. American National Standard for Safe Use of Lasers Outdoors ANSI Z136.6-2000, Approved by American National Standards Institute, Inc. Published by Laser Institute of America, 9 August 2000.

ASTROTECH, 1993. Astrotech Space Operations, Final Environmental Assessment for a Commercial Payload Processing Facility at VAFB, July 1993.

BOEING, 1996. McDonnell Douglass Aerospace, Payload Planner's Guide for Medium-Lite Payloads, August 1996.

BOEING, 1999. The Boeing Company, Delta IV Payload Planner's Guide, October 1999.

DANILIN, 2001. Danilin et. al., *Global Implications of Ozone Loss in a Space Shuttle Wake*, J. Geophys. Res., 106, 3591-3599, 2001.

DO, 1994. Do, T.T., *Titan IV Launch Sound Levels at 2,700, 6,680, 11,200, 16,800, 19,000, and 43,129 Feet From the Pad*, January 1994.

EWR 127-1, 1997. U. S. Air Force, Eastern and Western Range 127-1, 31 October 1997 (in revision 2001).

HOWARD, 1991. Howard, P. H., R. S. Boethling, W. M. Meylan, and E. M. Michalenko, *Handbook of Environmental Degradation Rates*, Lewis Publishers, Inc., 1991.

ILS, 1999. International Launch Services, Atlas Launch System Mission Planner's Guide Atlas V Addendum (AVMPG), December 1999.

JACKMAN, 1998. Jackman, C. H., et al., *A global modeling study of solid rocket aluminum oxide emission effects on stratospheric ozone*, Geophys. Res. Letts., 25, 907-910, 1998.

KUNKEL, 1991. Kunkel, Bruce A., *AFTOX 4.0 - The Air Force Toxic Chemical Dispersion Model - A User's Guide*, 8 May 1991.

MCINERNY, 1993. McInerny, S. A., *Delta Launch Sound Levels at 1500, 2000, 3000, and 4000 Feet From the Pad*, January 1993.

NASA,1991. National Aeronautics and Space Administration, Environmental Assessment (for the) Modification of Space Launch Complex - 2W Medium Expendable Launch Vehicle Services, Vandenberg Air Force Base, California, September 1991.

NASA,1993a. National Aeronautics and Space Administration, Supplemental Environmental Assessment (for the) Modifications and Operations of Space Launch Complex - 2W for the Delta II Launch Vehicle Vandenberg Air Force Base Calif., June 1993.

NASA, 1993b. National Aeronautics and Space Administration, Final Environmental Assessment (for the) Earth Observing System (EOS) Payload Processing Facility Vandenberg Air Force Base California, July 1993.

NASA, 1994. National Aeronautics and Space Administration, Mars Pathfinder Mission Environmental Assessment, July 1994.

NASA, 1995a. National Aeronautics and Space Administration, Final Environmental Impact Statement for the Cassini Mission, June 1995.

NASA, 1995b. National Aeronautics and Space Administration, Mars Global Surveyor Mission Environmental Assessment, September 1995.

NASA, 1997a. National Aeronautics and Space Administration, Environmental Resources Document, John F. Kennedy Space Center, NASA, 1997.

NASA, 1997b. National Aeronautics and Space Administration, Earth Observing System Final Programmatic Environmental Assessment, October 1997.

NASA, 1998. National Aeronautics and Space Administration, New Millennium Program Environmental Assessment, June 1998.

NASA, 2001. National Aeronautics and Space Administration, Acquisition Pollution Prevention Program's Extracted Information from "KSC Hazardous Waste Report", John Fusco, 04 September 2001.

NEWMAN, 2001. Newman, P. A. et al., *Chance Encounter with a Stratospheric Kerosene Rocket Plume from Russia over California*, Geophys. Res. Letts., 28, 959-963, 2001.

NPD 8610.7, 1999. National Aeronautics and Space Administration, NASA Policy Directive (NPD): 8610.7. Launch Services Risk Mitigation Policy for NASA-Owned or NASA-Sponsored Payloads, 04 February 1999.

NPD 8710.1, 1997. National Aeronautics and Space Administration, NASA Policy Directive (NPD): 8710.1. Emergency Preparedness Program, 24 February 1997.

NPD 8710.2B, 1997. National Aeronautics and Space Administration, NASA Policy Directive (NPD): 8710.1. NASA Safety and Health Program Policy, 10 June 1997.

NPG 8710.3, 1997. National Aeronautics and Space Administration, NASA Procedures and Guidelines (NPG): 8710.3. NASA Policy for Limiting Orbital Debris Generation, 29 May 1997.

NPG 8715.1, 1999. National Aeronautics and Space Administration, NASA Procedures and Guidelines (NPG): 8715.1. NASA Safety and Health Handbook Occupational Safety and Health Programs, 09 August 1999.

NPG 8715.3, 2000. National Aeronautics and Space Administration, NASA Procedures and Guidelines (NPG): 8715.3. NASA Safety Manual, 24 January 2000.

NPG 8820.3, 1999. National Aeronautics and Space Administration, NASA Procedures and Guidelines (NPG): 8820.3. Pollution Prevention, 1 March 1999.

NRC, 1995. National Research Council (U. S.) Committee on Space Debris. *Orbital Debris: A Technical Assessment*, National Academy Press, Library of Congress Catalog Number: 95-18686, ISBN 0-309-05125-8, 1995

ORBITAL, 1992. Orbital Sciences Corporation, Commercial Taurus Launch System Payload User's Guide (TD-2493), August 1992.

ORBITAL, 2000. Orbital Sciences Corporation, Pegasus User's Guide, August 2000.

OSTP, 1995. Office of Science and Technology Policy Interagency Report on Orbital Debris, National Science and Technology Council, Library of Congress Catalog Card Number: 95-72164. November 1995.

Ouellett, 2002. Record of personal communication between Rob Ouellette of KSC (KSC Hazardous Waste POC) and Vicky S. Mowrey of The Jet Propulsion Laboratory, 29 April 2002.

ROSS, 2000. M. N. Ross et al., *Observation of Stratospheric Ozone Depletion Associated with Delta II Rocket Emission*, Geophys. Res. Letts., 27, 2209-2212, 2000.

SCHMALZER, 1998b. Schmalzer, Paul A., et al., *Monitoring Direct Effects of Delta, Atlas, and Titan Launches from Cape Canaveral Air Station*, NASA/TM-1998-207912, June 1998.

UN, 1999. United Nations, Technical Report on Space Debris. United Nations Publication Sales No.: E.99.I.17, ISBN 92-1-100813-1, 1999.

USAF, 1987. U. S. Air Force, Environmental Assessment (for the) Titan II Space Launch Vehicle Modifications and Launch Operations Program Vandenberg Air Force Base California, August 1987.

USAF, 1988. U. S. Air Force, Environmental Assessment (for the) U. S. Air Force, Space Division Medium Launch Vehicle Program Cape Canaveral Air Force Station Florida, May 1988.

USAF, 1991. United States Air Force, Final Environmental Assessment (for the) Atlas II Program Vandenberg Air Force Base (California), August 1991.

USAF, 1992. United States Air Force, Environmental Assessment Taurus Standard Small Launch Vehicle Program, Vandenberg Air Force Base, April 1992.

USAF, 1993. U. S. Air Force, Supplemental Environmental Assessment (for the) Taurus Standard Small Launch Vehicle Program Vandenberg Air Force Base California, April 1993.

USAF, 1994. U. S. Air Force, Environmental Assessment (of the) Lockheed Launch Vehicle Vandenberg Air Force Base, California, 22 April 1994.

USAF, 1995a. U. S. Air Force, Final Environmental Assessment for the California Spaceport at Vandenberg Air Force Base, California, Volume I, February 1995.

USAF, 1995b. U. S. Air Force, Final Environmental Assessment for the California Spaceport at VAFB, Volume II, February 1995.

USAF, 1995c. U. S. Air Force, Environmental Assessment for Defense Satellite Communications System III with Integrated Apogee Boost System, Cape Canaveral Air Station, Florida, July 1995.

USAF, 1996a. U. S. Air Force, 45th Space Wing OPlan 32-3, Volume I, Hazardous Materials (HAZMAT) Emergency Response And Training, March 1996 (revision in progress with planned release in spring 2002).

USAF, 1996b. U. S. Air Force, Final Environmental Assessment for the Delta III Launch Vehicle Program Cape Canaveral Air Station Florida, April 1996.

USAF, 1996c. U. S. Air Force, Environmental Assessment for Launch Rate Increase for Delta II Program at Vandenberg Air Force Base, California, August 1996.

USAF, 1997. U. S. Air Force, Final Environmental Assessment Issuance of a Letter of Authorization for the Incidental Take of Marine Mammals for Programmatic Operations at Vandenberg Air Force Base, California, July 1997.

USAF, 1998. U. S. Air Force, Final Environmental Impact Statement Evolved Expendable Launch Vehicle, April 1998.

USAF, 2000a. U. S. Air Force, Final Supplemental Environmental Impact Statement Evolved Expendable Launch Vehicle, March 2000.

USAF, 2000b. U. S. Air Force, Record of Decision - Final Supplemental Environmental Impact Statement (FSEIS) for the Evolved Expendable Launch Vehicle (EELV), May 2000.

USAF, 2001. U. S. Air Force, SMC Orbital Hazards and Debris Mitigation User's Handbook, January 2001.

USGS, 1989. U.S. Geological Survey, *The Severity of an Earthquake*. U.S. Government Printing Office 1989-288-913, 1989.

WMO, 1991. World Meteorological Organization, Global Ozone Research and Monitoring Project - Report No. 25: *Scientific Assessment of Ozone Depletion: 1991*, 1991.

WMO, 1999. World Meteorological Organization, Global Ozone Research and Monitoring Project - Report No. 44: *Scientific Assessment of Ozone Depletion: 1998*, February 1999.

ZOLENSKY, 1989. Zolensky et. al., *Tenfold Increase in the Number of Large Particles in the Stratosphere as Measured over the Period 1976-1984*, J. Geophys. Res., 94, 1047-1056, 1989.

APPENDIX A – RELEVANT NEPA DOCUMENTATION

EXPENDABLE LAUNCH VEHICLE DOCUMENTATION

Final Supplemental Environmental Impact Statement for the Evolved Expendable Launch Vehicle Program, USAF, April 2000.

Final Environmental Impact Statement for the Evolved Expendable Launch Vehicle Program, USAF, April 1998.

Environmental Assessment for Launch Rate Increase for Delta II Program at Vandenberg Air Force Base, McDonnell Douglas Aerospace, August 1996.

Final Environmental Assessment for the Delta III Launch Vehicle Program at Cape Canaveral Air Force Station, McDonnell Douglas Aerospace, April 1996.

Environmental Assessment for the California Spaceport, Vandenberg Air Force Base, California Commercial Spaceport Inc., December 1994.

Environmental Assessment of the Proposed Spaceport Florida Authority Commercial Launch Program at LC-46 at CCAS, USAF & Spaceport Florida Authority, October 1994.

Environmental Assessment for the Lockheed Launch Vehicle, Vandenberg AIR FORCE BASE,, USAF, April 1994.

Supplemental Environmental Assessment Taurus Standard Small Launch Vehicle Program, Vandenberg AIR FORCE BASE,, USAF, April 1993.

Environmental Assessment for the Orbital Sciences Corporation Commercial Launch Service Program at Vandenberg AIR FORCE BASE,, Orbital Sciences Corporation, December 1992.

Supplemental Environmental Assessment for Modifications and Operations of SLC-2W for the Delta II Launch Vehicle, Vandenberg AIR FORCE BASE,, NASA Goddard Space Flight Center, November 1992.

Environmental Assessment Taurus Standard Small Launch Vehicle Program, Vandenberg AIR FORCE BASE,, USAF, April 1992.

Environmental Assessment of the Modification of SLC-2W, Vandenberg AIR FORCE BASE,, NASA Goddard Space Flight Center, September 1991.

Environmental Assessment Commercial Atlas IIAS, Cape Canaveral Air Force Station, USAF, August 1991.

Environmental Assessment Atlas II Program, Vandenberg AIR FORCE BASE,, USAF, August 1991.

Environmental Assessment for the Air Force Small Launch Vehicle, Vandenberg AIR FORCE BASE,, Edwards AIR FORCE BASE,, and San Nicholas Island, USAF, May 1991.

Pegasus Precision Injection Kit, Supplemental Environmental Assessment, Air-Launched Space Booster, Edwards AIR FORCE BASE, and Western Test Range, April 1991.

Environmental Assessment for the Atlas IIAS Program, Cape Canaveral Air Force Station, USAF, September 1990.

Environmental Assessment Titan IV / Solid Rocket Motor Upgrade Program, Cape Canaveral Air Force Station and Vandenberg Air Force Base, USAF, February 1990.

Environmental Assessment Pegasus Air-Launched Space Booster, Edwards AIR FORCE BASE, and Western Test Range, USAF, September 1989.

Environmental Assessment for the American Rocket Company (AMROC) Commercial Expendable Launch Vehicle, Initial Evaluation Launch Phase, Vandenberg AIR FORCE BASE,, USAF, July 1989.

Draft Environmental Impact Statement for Construction and Operation of Space Launch Complex 7, Vandenberg AIR FORCE BASE,, USAF, July 1989.

Environmental Assessment for the Medium Launch Vehicle Program, Cape Canaveral Air Force Station, USAF, May 1988.

Environmental Assessment Titan IV Space Launch Vehicle Modification and Operation, Vandenberg AIR FORCE BASE,, USAF, February 1988.

Environmental Assessment Titan II Space Launch Vehicle Modifications and Launch Operations Program, Vandenberg AIR FORCE BASE,, USAF, August 1987.

Environmental Assessment Complementary Expendable Launch Vehicle, Cape Canaveral AIR FORCE STATION, USAF, June 1986.

SPACECRAFT DOCUMENTATION

Programmatic Environmental Assessment of the New Millennium Program, NASA Jet Propulsion Laboratory, June 1998.

Final Programmatic Environmental Assessment for the Earth Observing System, NASA Jet Propulsion Laboratory, October 1997.

Overview Environmental Assessment for the Space Based Infrared System (SBIRS), USAF, December 1996.

Environmental Assessment for the Near Earth Asteroid Rendezvous Mission, NASA, December 1995.

Environmental Assessment for the Mars Global Surveyor Mission, NASA, September 1995.

Environmental Assessment for Defense Satellite Communications System III with Integrated Apogee Boost System at Cape Canaveral AS, USAF, July 1995.

Final Environmental Impact Statement for the Cassini Mission, NASA, June 1995.

Final Environmental Assessment for NAVSTAR Global Positioning System, Block IIR, and Medium Launch Vehicle II, Cape Canaveral AIR FORCE STATION, USAF, November 1994.

Environmental Assessment for the Milstar I and II Satellite Vehicle, Cape Canaveral AIR FORCE STATION, USAF, January 1994.

Environmental Assessment for the Space Test Experiments Platform Mission 1, Vandenberg AIR FORCE BASE,, USAF, January 1994.

Environmental Assessment Navstar Global Positioning System, Block II/IIA, Cape Canaveral AIR FORCE STATION, USAF, August 1993.

PAYLOAD PROCESSING FACILITIES

Environmental Assessment for the Earth Observing System Payload Processing Facility at Vandenberg AIR FORCE BASE,, NASA, KSC-DF-3657, July 1993.

Final Environmental Assessment for a Commercial Payload Processing Facility at Vandenberg AIR FORCE BASE,, Halliburton NUS Corporation, July 1993.

Environmental Assessment for Modification to and Operations of the Hypergolic Maintenance and Checkout Facility, Vandenberg AIR FORCE BASE,, USAF, January 1989.

(THIS PAGE INTENTIONALLY LEFT BLANK)

APPENDIX B – AFTOX MODEL PREDICTIONS FOR DISPERSION OF VAPORS FROM SPILLS OF PAYLOAD LIQUID PROPELLANTS

The U. S. Air Force Toxic Chemical Dispersion Model (AFTOX) was used to predict downwind dispersion distances for propellant vapors that would be generated by worst case spills from NASA routine payload spacecraft. AFTOX was officially endorsed by the Air Weather Service in 1988 and is used extensively throughout the U. S. Air Force. It is a Gaussian puff/plume model designed to simulate a variety of releases including continuous or instantaneous, liquid or gas, surface or elevated, and point or area. It includes several evaporation models for predicting emission rates from liquid spills. AFTOX is a simple model that assumes a uniform windfield and flat terrain (Kunkel, 1991). This appendix provides the results of the AFTOX runs relevant to the NASA routine payload spacecraft.

Worst case spills of three liquid propellants were considered: 1000 kg (2200 lb) of hydrazine, 1000 kg (2200 lb) of monomethylhydrazine (MMH), and 1200 kg (2640 lb) of nitrogen tetroxide (NTO). These are the maximum propellant loads for the routine payload spacecraft. Worst case assumptions were that the spills were instantaneous and unconfined, and that they completely evaporated without any mitigating actions such as removal, dilution, or neutralization. These worst case assumptions are very unlikely to occur considering the regulations governing the use and transport of these hazardous propellants.

AFTOX was used to predict mean distances to selected downwind concentrations of each air toxin. Model output also provides a toxic hazard corridor distance that is the 90% probability distance. The selected concentrations used for this analysis were the Short-Term Emergency Guidance Levels (SPEGLs) for hydrazine (0.12 ppm 1-hour average), MMH (0.26 ppm 1-hour average), and nitrogen dioxide (1.0 ppm 1-hour average). The Committee on Toxicology, National Research Council, issues SPEGLs.

Four AFTOX model predictions were generated for each propellant at each launch site (CCAFS and VAFB). The four predictions at each site covered daytime releases at two different wind speeds (2 and 10 m/s; 7 and 33 ft/s) and nighttime releases at two different wind speeds (2 and 10 m/s; 7 and 33 ft/s). Daytime temperatures were assumed to be 32°C (90°F) at CCAFS and 20°C (68°F) at VAFB. Nighttime temperatures were assumed to be 5°C (41°F) at both sites. These meteorological conditions were selected to represent a variety of possible dispersion cases. Selection of other conditions would result in different model results.

AFTOX predicted the following results for spills at CCAFS: 1) an unconfined spill of 1000 kg (2200 lb) of hydrazine would produce a spill area of 107 m^2 (1150 ft^2) and a mean hazard distance of up to 1493 m (4897 feet); 2) an unconfined spill of 1000 kg (2200 lb) of MMH would produce a spill area of 114 m^2 (1227 ft^2) and a mean hazard distance of up to 1452 m (4763 feet); and 3) an unconfined spill of 1200 kg (2640 lb) of NTO would produce a spill area of 80 m^2 (861 ft^2) and a mean hazard distance of up to 5680 m (18630 feet) for nitrogen dioxide. Note: AFTOX predicts that NTO liquid spills are gas releases at 32°C (90°F) ambient

temperature. For modeling purposes, the gas was assumed to have a release duration of five minutes.

AFTOX predicted the following results for spills at VAFB: 1) an unconfined spill of 1000 kg (2200 lb) of hydrazine would produce a spill area of 99 m^2 (1065 ft^2) and a mean hazard distance of up to 1140 m (3740 ft); 2) an unconfined spill of 1000 kg (2200 lb) of MMH would produce a spill area of 115 m^2 (1237 ft^2) and a mean hazard distance of up to 1170 m (3838 ft); and 3) an unconfined spill of 1200 kg (2640 lb) of NTO would produce a spill area of 81 m^2 (872 ft^2) and a mean hazard distance of up to 3390 m (11120 ft) for nitrogen dioxide.

These mean hazard distances are for one-hour average concentrations. However, for spills that evaporated in less than one hour (many of the NTO spills) the vapor concentration averaging time calculated by AFTOX is the evaporation time rather than for one hour. Therefore, the calculated hazard distance for many of the NTO spills is much longer than the actual one-hour average hazard distance. This is another conservative factor in the AFTOX results.

The following is the AFTOX-generated results for each of the 24 model runs that were needed for the NASA routine payload spacecraft NEPA analysis.

Hydrazine Spills at VAFB

```
        USAF TOXIC CHEMICAL DISPERSION MODEL
                     AFTOX

Vandenberg AIR FORCE BASE,
DATE: 03-01-01
TIME: 1400 LST

INSTANTANEOUS RELEASE
HYDRAZINE
TEMPERATURE = 20 C
WIND DIRECTION = 0
WIND SPEED = 2 M/S
SUN ELEVATION ANGLE IS 41 DEGREES
CLOUD COVER IS 0 EIGHTHS
GROUND IS DRY
THERE IS NO INVERSION
ATMOSPHERIC STABILITY PARAMETER IS .5
SPILL SITE ROUGHNESS LENGTH IS 10 CM

TOTAL AMOUNT SPILLED IS 1000 KG
AREA OF SPILL IS 99 SQ M
CALCULATED POOL TEMPERATURE IS  17.2 C
EVAPORATION RATE IS 2.52 KG/MIN
THE CHEMICAL WILL EVAPORATE IN 396.1 MIN
CONCENTRATION AVERAGING TIME IS 60 MIN
ELAPSED TIME SINCE START OF SPILL IS 396 MIN
HEIGHT OF INTEREST IS 2 M

-----------------------------------------------------
AT 396 MIN, THE MAXIMUM DISTANCE FOR .12 PPM IS 524 M
MAXIMUM TOXIC CORRIDOR LENGTH = 1.1 KM  AT 396 MIN
 DIRECTION & WIDTH  180 +/- 75 DEG

-----------------------------------------------------
```

Hydrazine Spills at VAFB

```
        USAF TOXIC CHEMICAL DISPERSION MODEL
                      AFTOX

Vandenberg AFB
DATE: 03-01-01
TIME: 1400 LST

INSTANTANEOUS RELEASE
HYDRAZINE
TEMPERATURE = 20 C
WIND DIRECTION = 0
WIND SPEED = 10 M/S
SUN ELEVATION ANGLE IS 41 DEGREES
CLOUD COVER IS 0 EIGHTHS
GROUND IS DRY
THERE IS NO INVERSION
ATMOSPHERIC STABILITY PARAMETER IS 3.35
SPILL SITE ROUGHNESS LENGTH IS 10 CM

TOTAL AMOUNT SPILLED IS 1000 KG
AREA OF SPILL IS 99 SQ M
CALCULATED POOL TEMPERATURE IS  16.6 C
EVAPORATION RATE IS 2.74 KG/MIN
THE CHEMICAL WILL EVAPORATE IN 364.4 MIN
CONCENTRATION AVERAGING TIME IS 60 MIN
ELAPSED TIME SINCE START OF SPILL IS 364 MIN
HEIGHT OF INTEREST IS 2 M

-----------------------------------------------------
AT 364 MIN, THE MAXIMUM DISTANCE FOR .12 PPM IS 1.14 KM
MAXIMUM TOXIC CORRIDOR LENGTH = 2.41 KM  AT 364 MIN
 DIRECTION & WIDTH  180 +/- 32 DEG

-----------------------------------------------------
```

Hydrazine Spills at VAFB

```
        USAF TOXIC CHEMICAL DISPERSION MODEL
                     AFTOX

Vandenberg AFB
DATE: 03-01-01
TIME: 0200 LST

INSTANTANEOUS RELEASE
HYDRAZINE
TEMPERATURE = 5 C
WIND DIRECTION = 0
WIND SPEED = 2 M/S
NIGHTTIME SPILL
CLOUD COVER IS 0 EIGHTHS
GROUND IS DRY
THERE IS NO INVERSION
ATMOSPHERIC STABILITY PARAMETER IS 6
SPILL SITE ROUGHNESS LENGTH IS 10 CM

TOTAL AMOUNT SPILLED IS 1000 KG
AREA OF SPILL IS 99 SQ M
CALCULATED POOL TEMPERATURE IS  2 C
EVAPORATION RATE IS .08 KG/MIN
THE CHEMICAL WILL EVAPORATE IN 11578.3 MIN
CONCENTRATION AVERAGING TIME IS 60 MIN
HEIGHT OF INTEREST IS 2 M

-----------------------------------------------------
THE MAXIMUM DISTANCE FOR .12 PPM IS 667 M
MAXIMUM TOXIC CORRIDOR LENGTH = 1.4 KM
 DIRECTION & WIDTH  180 +/- 45 DEG

-----------------------------------------------------
```

Hydrazine Spills at VAFB

```
        USAF TOXIC CHEMICAL DISPERSION MODEL
                    AFTOX

Vandenberg AFB
DATE: 03-01-01
TIME: 0200 LST

INSTANTANEOUS RELEASE
HYDRAZINE
TEMPERATURE = 5 C
WIND DIRECTION = 0
WIND SPEED = 10 M/S
NIGHTTIME SPILL
CLOUD COVER IS 0 EIGHTHS
GROUND IS DRY
THERE IS NO INVERSION
ATMOSPHERIC STABILITY PARAMETER IS 3.53
SPILL SITE ROUGHNESS LENGTH IS 10 CM

TOTAL AMOUNT SPILLED IS 1000 KG
AREA OF SPILL IS 99 SQ M
CALCULATED POOL TEMPERATURE IS  2 C
EVAPORATION RATE IS 1.09 KG/MIN
THE CHEMICAL WILL EVAPORATE IN 913.1 MIN
CONCENTRATION AVERAGING TIME IS 60 MIN
ELAPSED TIME SINCE START OF SPILL IS 913 MIN
HEIGHT OF INTEREST IS 2 M

-----------------------------------------------------
AT 913 MIN, THE MAXIMUM DISTANCE FOR .12 PPM IS 738 M
MAXIMUM TOXIC CORRIDOR LENGTH = 1.56 KM  AT 913 MIN
 DIRECTION & WIDTH  180 +/- 22 DEG
```

Hydrazine Spills at CCAFS

```
        USAF TOXIC CHEMICAL DISPERSION MODEL
                    AFTOX

Cape Canaveral AFS
DATE: 03-01-01
TIME: 1400 LST

INSTANTANEOUS RELEASE
HYDRAZINE
TEMPERATURE = 90  F
WIND DIRECTION = 0
WIND SPEED = 4 KNOTS
SUN ELEVATION ANGLE IS 49 DEGREES
CLOUD COVER IS 0 EIGHTHS
GROUND IS DRY
THERE IS NO INVERSION
ATMOSPHERIC STABILITY PARAMETER IS .5
SPILL SITE ROUGHNESS LENGTH IS 10 CM

TOTAL AMOUNT SPILLED IS 1000 KG
AREA OF SPILL IS 1067 SQ FT
CALCULATED POOL TEMPERATURE IS  24.8 C
EVAPORATION RATE IS 3.83 KG/MIN
THE CHEMICAL WILL EVAPORATE IN 260.8 MIN
CONCENTRATION AVERAGING TIME IS 60 MIN
ELAPSED TIME SINCE START OF SPILL IS 260 MIN
HEIGHT OF INTEREST IS 6 FT
---------------------------------------------------
AT 260 MIN, THE MAXIMUM DISTANCE FOR .12 PPM IS 2148 FT
MAXIMUM TOXIC CORRIDOR LENGTH = 4545 FT  AT 261 MIN
 DIRECTION & WIDTH  180 +/- 75 DEG

---------------------------------------------------
_
```

Hydrazine Spills at CCAFS

```
        USAF TOXIC CHEMICAL DISPERSION MODEL
                    AFTOX

Cape Canaveral AFS
DATE: 03-01-01
TIME: 1400 LST

INSTANTANEOUS RELEASE
HYDRAZINE
TEMPERATURE = 90  F
WIND DIRECTION = 0
WIND SPEED = 20 KNOTS
SUN ELEVATION ANGLE IS 49 DEGREES
CLOUD COVER IS 0 EIGHTHS
GROUND IS DRY
THERE IS NO INVERSION
ATMOSPHERIC STABILITY PARAMETER IS 3.29
SPILL SITE ROUGHNESS LENGTH IS 10 CM

TOTAL AMOUNT SPILLED IS 1000 KG
AREA OF SPILL IS 1067 SQ FT
CALCULATED POOL TEMPERATURE IS  24.1 C
EVAPORATION RATE IS 4.07 KG/MIN
THE CHEMICAL WILL EVAPORATE IN 245.3 MIN
CONCENTRATION AVERAGING TIME IS 60 MIN
ELAPSED TIME SINCE START OF SPILL IS 245 MIN
HEIGHT OF INTEREST IS 6 FT
-----------------------------------------------------
AT 245 MIN, THE MAXIMUM DISTANCE FOR .12 PPM IS 4897 FT
MAXIMUM TOXIC CORRIDOR LENGTH = 1.97 MI  AT 245 MIN
 DIRECTION & WIDTH  180 +/- 33 DEG

-----------------------------------------------------
```

Hydrazine Spills at CCAFS

```
        USAF TOXIC CHEMICAL DISPERSION MODEL
                      AFTOX

Cape Canaveral AFS
DATE: 03-01-01
TIME: 0200 LST

INSTANTANEOUS RELEASE
HYDRAZINE
TEMPERATURE = 40  F
WIND DIRECTION = 0
WIND SPEED = 4 KNOTS
NIGHTTIME SPILL
CLOUD COVER IS 0 EIGHTHS
GROUND IS DRY
THERE IS NO INVERSION
ATMOSPHERIC STABILITY PARAMETER IS 6
SPILL SITE ROUGHNESS LENGTH IS 10 CM

TOTAL AMOUNT SPILLED IS 1000 KG
AREA OF SPILL IS 1067 SQ FT
CALCULATED POOL TEMPERATURE IS  2 C
EVAPORATION RATE IS .08 KG/MIN
THE CHEMICAL WILL EVAPORATE IN 11724.7 MIN
CONCENTRATION AVERAGING TIME IS 60 MIN
HEIGHT OF INTEREST IS 6 FT
-----------------------------------------------------
THE MAXIMUM DISTANCE FOR .12 PPM IS 2196 FT
MAXIMUM TOXIC CORRIDOR LENGTH = 4610 FT
 DIRECTION & WIDTH  180 +/- 45 DEG

-----------------------------------------------------
```

Hydrazine Spills at CCAFS

```
        USAF TOXIC CHEMICAL DISPERSION MODEL
                    AFTOX

Cape Canaveral AFS
DATE: 03-01-01
TIME: 0200 LST

INSTANTANEOUS RELEASE
HYDRAZINE
TEMPERATURE = 40  F
WIND DIRECTION = 0
WIND SPEED = 20 KNOTS
NIGHTTIME SPILL
CLOUD COVER IS 0 EIGHTHS
GROUND IS DRY
THERE IS NO INVERSION
ATMOSPHERIC STABILITY PARAMETER IS 3.54
SPILL SITE ROUGHNESS LENGTH IS 10 CM

TOTAL AMOUNT SPILLED IS 1000 KG
AREA OF SPILL IS 1067 SQ FT
CALCULATED POOL TEMPERATURE IS  2 C
EVAPORATION RATE IS 1.02 KG/MIN
THE CHEMICAL WILL EVAPORATE IN 972.5 MIN
CONCENTRATION AVERAGING TIME IS 60 MIN
ELAPSED TIME SINCE START OF SPILL IS 972 MIN
HEIGHT OF INTEREST IS 6 FT
---------------------------------------------------
AT 972 MIN, THE MAXIMUM DISTANCE FOR .12 PPM IS 2452 FT
MAXIMUM TOXIC CORRIDOR LENGTH = 5221 FT  AT 973 MIN
 DIRECTION & WIDTH  180 +/- 22 DEG
```

MMH Spills at VAFB

```
        USAF TOXIC CHEMICAL DISPERSION MODEL
                     AFTOX

Vandenberg AFB
DATE: 03-01-01
TIME: 1400 LST

INSTANTANEOUS RELEASE
MONOMETHYLHYDRAZINE(MMH)
TEMPERATURE = 20 C
WIND DIRECTION = 0
WIND SPEED = 2 M/S
SUN ELEVATION ANGLE IS 41 DEGREES
CLOUD COVER IS 0 EIGHTHS
GROUND IS DRY
THERE IS NO INVERSION
ATMOSPHERIC STABILITY PARAMETER IS .5
SPILL SITE ROUGHNESS LENGTH IS 10 CM

TOTAL AMOUNT SPILLED IS 1000 KG
AREA OF SPILL IS 115 SQ M
CALCULATED POOL TEMPERATURE IS  9.2 C
EVAPORATION RATE IS 7.61 KG/MIN
THE CHEMICAL WILL EVAPORATE IN 131.4 MIN
CONCENTRATION AVERAGING TIME IS 60 MIN
ELAPSED TIME SINCE START OF SPILL IS 131 MIN
HEIGHT OF INTEREST IS 2 M

-----------------------------------------------------
AT 131 MIN, THE MAXIMUM DISTANCE FOR .24 PPM IS 537 M
MAXIMUM TOXIC CORRIDOR LENGTH = 1.13 KM  AT 131 MIN
 DIRECTION & WIDTH  180 +/- 75 DEG

-----------------------------------------------------
```

MMH Spills at VAFB

```
        USAF TOXIC CHEMICAL DISPERSION MODEL
                    AFTOX

Vandenberg AFB
DATE: 03-01-01
TIME: 1400 LST

INSTANTANEOUS RELEASE
MONOMETHYLHYDRAZINE(MMH)
TEMPERATURE = 20 C
WIND DIRECTION = 0
WIND SPEED = 10 M/S
SUN ELEVATION ANGLE IS 41 DEGREES
CLOUD COVER IS 0 EIGHTHS
GROUND IS DRY
THERE IS NO INVERSION
ATMOSPHERIC STABILITY PARAMETER IS 3.35
SPILL SITE ROUGHNESS LENGTH IS 10 CM

TOTAL AMOUNT SPILLED IS 1000 KG
AREA OF SPILL IS 115 SQ M
CALCULATED POOL TEMPERATURE IS  8.6 C
EVAPORATION RATE IS 8.21 KG/MIN
THE CHEMICAL WILL EVAPORATE IN 121.7 MIN
CONCENTRATION AVERAGING TIME IS 60 MIN
ELAPSED TIME SINCE START OF SPILL IS 121 MIN
HEIGHT OF INTEREST IS 2 M

---------------------------------------------------
AT 121 MIN, THE MAXIMUM DISTANCE FOR .24 PPM IS 1.17 KM
MAXIMUM TOXIC CORRIDOR LENGTH = 2.46 KM  AT 122 MIN
 DIRECTION & WIDTH  180 +/- 32 DEG

---------------------------------------------------
```

MMH Spills at VAFB

```
        USAF TOXIC CHEMICAL DISPERSION MODEL
                     AFTOX

Vandenberg AFB
DATE: 03-01-01
TIME: 0200 LST

INSTANTANEOUS RELEASE
MONOMETHYLHYDRAZINE(MMH)
TEMPERATURE = 5 C
WIND DIRECTION = 0
WIND SPEED = 10 M/S
NIGHTTIME SPILL
CLOUD COVER IS 0 EIGHTHS
GROUND IS DRY
THERE IS NO INVERSION
ATMOSPHERIC STABILITY PARAMETER IS 3.53
SPILL SITE ROUGHNESS LENGTH IS 10 CM

TOTAL AMOUNT SPILLED IS 1000 KG
AREA OF SPILL IS 115 SQ M
CALCULATED POOL TEMPERATURE IS -4.6 C
EVAPORATION RATE IS 3.41 KG/MIN
THE CHEMICAL WILL EVAPORATE IN 292.6 MIN
CONCENTRATION AVERAGING TIME IS 60 MIN
ELAPSED TIME SINCE START OF SPILL IS 292 MIN
HEIGHT OF INTEREST IS 2 M

-----------------------------------------------------
AT 292 MIN, THE MAXIMUM DISTANCE FOR .24 PPM IS 773 M
MAXIMUM TOXIC CORRIDOR LENGTH = 1.62 KM  AT 293 MIN
 DIRECTION & WIDTH  180 +/- 22 DEG

-----------------------------------------------------
```

MMH Spills at VAFB

```
        USAF TOXIC CHEMICAL DISPERSION MODEL
                    AFTOX

Vandenberg AFB
DATE: 03-01-01
TIME: 0200 LST

INSTANTANEOUS RELEASE
MONOMETHYLHYDRAZINE(MMH)
TEMPERATURE = 5 C
WIND DIRECTION = 0
WIND SPEED = 2 M/S
NIGHTTIME SPILL
CLOUD COVER IS 0 EIGHTHS
GROUND IS DRY
THERE IS NO INVERSION
ATMOSPHERIC STABILITY PARAMETER IS 6
SPILL SITE ROUGHNESS LENGTH IS 10 CM

TOTAL AMOUNT SPILLED IS 1000 KG
AREA OF SPILL IS 115 SQ M
CALCULATED POOL TEMPERATURE IS -1.9 C
EVAPORATION RATE IS .32 KG/MIN
THE CHEMICAL WILL EVAPORATE IN 3086.6 MIN
CONCENTRATION AVERAGING TIME IS 60 MIN
ELAPSED TIME SINCE START OF SPILL IS 3086 MIN
HEIGHT OF INTEREST IS 2 M

-----------------------------------------------------
AT 3086 MIN, THE MAXIMUM DISTANCE FOR .24 PPM IS 780 M
MAXIMUM TOXIC CORRIDOR LENGTH = 1.65 KM  AT 3087 MIN
 DIRECTION & WIDTH  180 +/- 45 DEG
```

MMH Spills at CCAFS

```
        USAF TOXIC CHEMICAL DISPERSION MODEL
                     AFTOX

Cape Canaveral AFS
DATE: 03-01-01
TIME: 1400 LST

INSTANTANEOUS RELEASE
MONOMETHYLHYDRAZINE(MMH)
TEMPERATURE = 90  F
WIND DIRECTION = 0
WIND SPEED = 4 KNOTS
SUN ELEVATION ANGLE IS 49 DEGREES
CLOUD COVER IS 0 EIGHTHS
GROUND IS DRY
THERE IS NO INVERSION
ATMOSPHERIC STABILITY PARAMETER IS .5
SPILL SITE ROUGHNESS LENGTH IS 10 CM

TOTAL AMOUNT SPILLED IS 1000 KG
AREA OF SPILL IS 1242 SQ FT
CALCULATED POOL TEMPERATURE IS  15 C
EVAPORATION RATE IS 10.55 KG/MIN
THE CHEMICAL WILL EVAPORATE IN 94.7 MIN
CONCENTRATION AVERAGING TIME IS 60 MIN
ELAPSED TIME SINCE START OF SPILL IS 94 MIN
HEIGHT OF INTEREST IS 6 FT
----------------------------------------------------
AT 94 MIN, THE MAXIMUM DISTANCE FOR .24 PPM IS 2105 FT
MAXIMUM TOXIC CORRIDOR LENGTH = 4456 FT  AT 95 MIN
 DIRECTION & WIDTH  180 +/- 75 DEG

----------------------------------------------------
```

MMH Spills at CCAFS

```
        USAF TOXIC CHEMICAL DISPERSION MODEL
                     AFTOX

Cape Canaveral AFS
DATE: 03-01-01
TIME: 1400 LST

INSTANTANEOUS RELEASE
MONOMETHYLHYDRAZINE(MMH)
TEMPERATURE = 90  F
WIND DIRECTION = 0
WIND SPEED = 20 KNOTS
SUN ELEVATION ANGLE IS 49 DEGREES
CLOUD COVER IS 0 EIGHTHS
GROUND IS DRY
THERE IS NO INVERSION
ATMOSPHERIC STABILITY PARAMETER IS 3.29
SPILL SITE ROUGHNESS LENGTH IS 10 CM

TOTAL AMOUNT SPILLED IS 1000 KG
AREA OF SPILL IS 1242 SQ FT
CALCULATED POOL TEMPERATURE IS  14.5 C
EVAPORATION RATE IS 11.2 KG/MIN
THE CHEMICAL WILL EVAPORATE IN 89.2 MIN
CONCENTRATION AVERAGING TIME IS 60 MIN
ELAPSED TIME SINCE START OF SPILL IS 89 MIN
HEIGHT OF INTEREST IS 6 FT
----------------------------------------------------
AT 89 MIN, THE MAXIMUM DISTANCE FOR .24 PPM IS 4765 FT
MAXIMUM TOXIC CORRIDOR LENGTH = 1.9 MI  AT 89 MIN
 DIRECTION & WIDTH  180 +/- 33 DEG

----------------------------------------------------
```

MMH Spills at CCAFS

```
        USAF TOXIC CHEMICAL DISPERSION MODEL
                      AFTOX

Cape Canaveral AFS
DATE: 03-01-01
TIME: 0200 LST

INSTANTANEOUS RELEASE
MONOMETHYLHYDRAZINE(MMH)
TEMPERATURE = 40  F
WIND DIRECTION = 0
WIND SPEED = 4 KNOTS
NIGHTTIME SPILL
CLOUD COVER IS 0 EIGHTHS
GROUND IS DRY
THERE IS NO INVERSION
ATMOSPHERIC STABILITY PARAMETER IS 6
SPILL SITE ROUGHNESS LENGTH IS 10 CM

TOTAL AMOUNT SPILLED IS 1000 KG
AREA OF SPILL IS 1242 SQ FT
CALCULATED POOL TEMPERATURE IS -2.3 C
EVAPORATION RATE IS .31 KG/MIN
THE CHEMICAL WILL EVAPORATE IN 3222.2 MIN
CONCENTRATION AVERAGING TIME IS 60 MIN
ELAPSED TIME SINCE START OF SPILL IS 3222 MIN
HEIGHT OF INTEREST IS 6 FT
----------------------------------------------------
AT 3222 MIN, THE MAXIMUM DISTANCE FOR .24 PPM IS 2524 FT
MAXIMUM TOXIC CORRIDOR LENGTH = 1 MI  AT 3222 MIN
 DIRECTION & WIDTH  180 +/- 45 DEG

----------------------------------------------------
_
```

MMH Spills at CCAFS

```
        USAF TOXIC CHEMICAL DISPERSION MODEL
                    AFTOX

Cape Canaveral AFS
DATE: 03-01-01
TIME: 0200 LST

INSTANTANEOUS RELEASE
MONOMETHYLHYDRAZINE(MMH)
TEMPERATURE = 40  F
WIND DIRECTION = 0
WIND SPEED = 20 KNOTS
NIGHTTIME SPILL
CLOUD COVER IS 0 EIGHTHS
GROUND IS DRY
THERE IS NO INVERSION
ATMOSPHERIC STABILITY PARAMETER IS 3.54
SPILL SITE ROUGHNESS LENGTH IS 10 CM

TOTAL AMOUNT SPILLED IS 1000 KG
AREA OF SPILL IS 1242 SQ FT
CALCULATED POOL TEMPERATURE IS -4.9 C
EVAPORATION RATE IS 3.13 KG/MIN
THE CHEMICAL WILL EVAPORATE IN 318.5 MIN
CONCENTRATION AVERAGING TIME IS 60 MIN
ELAPSED TIME SINCE START OF SPILL IS 318 MIN
HEIGHT OF INTEREST IS 6 FT
---------------------------------------------------
AT 318 MIN, THE MAXIMUM DISTANCE FOR .24 PPM IS 2535 FT
MAXIMUM TOXIC CORRIDOR LENGTH = 1 MI  AT 319 MIN
 DIRECTION & WIDTH  180 +/- 22 DEG
```

Nitrogen Tetroxide Spills at VAFB

```
        USAF TOXIC CHEMICAL DISPERSION MODEL
                     AFTOX

Vandenberg AFB
DATE: 03-01-01
TIME: 1400 LST

INSTANTANEOUS RELEASE
NITROGEN TETROXIDE
TEMPERATURE = 20 C
WIND DIRECTION = 0
WIND SPEED = 2 M/S
SUN ELEVATION ANGLE IS 41 DEGREES
CLOUD COVER IS 0 EIGHTHS
GROUND IS DRY
THERE IS NO INVERSION
ATMOSPHERIC STABILITY PARAMETER IS .5
SPILL SITE ROUGHNESS LENGTH IS 10 CM

TOTAL AMOUNT SPILLED IS 1200 KG
AREA OF SPILL IS 83 SQ M
CALCULATED POOL TEMPERATURE IS -11.2 C
EVAPORATION RATE IS 91.3 KG/MIN
THE CHEMICAL WILL EVAPORATE IN 13.1 MIN
CONCENTRATION AVERAGING TIME IS 13.14 MIN
ELAPSED TIME SINCE START OF SPILL IS 13 MIN
HEIGHT OF INTEREST IS 2 M

-----------------------------------------------------
AT 13 MIN, THE MAXIMUM DISTANCE FOR 1 PPM IS 924 M
MAXIMUM TOXIC CORRIDOR LENGTH = 1.94 KM  AT 13 MIN
 DIRECTION & WIDTH  180 +/- 75 DEG

-----------------------------------------------------
```

Nitrogen Tetroxide Spills at VAFB

```
        USAF TOXIC CHEMICAL DISPERSION MODEL
                     AFTOX

Vandenberg AFB
DATE: 03-01-01
TIME: 1400 LST

INSTANTANEOUS RELEASE
NITROGEN TETROXIDE
TEMPERATURE = 20 C
WIND DIRECTION = 0
WIND SPEED = 10 M/S
SUN ELEVATION ANGLE IS 41 DEGREES
CLOUD COVER IS 0 EIGHTHS
GROUND IS DRY
THERE IS NO INVERSION
ATMOSPHERIC STABILITY PARAMETER IS 3.35
SPILL SITE ROUGHNESS LENGTH IS 10 CM

TOTAL AMOUNT SPILLED IS 1200 KG
AREA OF SPILL IS 83 SQ M
CALCULATED POOL TEMPERATURE IS -11.2 C
EVAPORATION RATE IS 103.35 KG/MIN
THE CHEMICAL WILL EVAPORATE IN 11.6 MIN
CONCENTRATION AVERAGING TIME IS 11.61 MIN
ELAPSED TIME SINCE START OF SPILL IS 11 MIN
HEIGHT OF INTEREST IS 2 M

----------------------------------------------------
AT 11 MIN, THE MAXIMUM DISTANCE FOR 1 PPM IS 2.94 KM
MAXIMUM TOXIC CORRIDOR LENGTH = 6.24 KM  AT 12 MIN
 DIRECTION & WIDTH  180 +/- 32 DEG

----------------------------------------------------
```

Nitrogen Tetroxide Spills at VAFB

```
        USAF TOXIC CHEMICAL DISPERSION MODEL
                     AFTOX

Vandenberg AFB
DATE: 03-01-01
TIME: 0200 LST

INSTANTANEOUS RELEASE
NITROGEN TETROXIDE
TEMPERATURE = 5 C
WIND DIRECTION = 0
WIND SPEED = 2 M/S
NIGHTTIME SPILL
CLOUD COVER IS 0 EIGHTHS
GROUND IS DRY
THERE IS NO INVERSION
ATMOSPHERIC STABILITY PARAMETER IS 6
SPILL SITE ROUGHNESS LENGTH IS 10 CM

TOTAL AMOUNT SPILLED IS 1200 KG
AREA OF SPILL IS 81 SQ M
CALCULATED POOL TEMPERATURE IS -11.2 C
EVAPORATION RATE IS 8.03 KG/MIN
THE CHEMICAL WILL EVAPORATE IN 149.4 MIN
CONCENTRATION AVERAGING TIME IS 60 MIN
ELAPSED TIME SINCE START OF SPILL IS 149 MIN
HEIGHT OF INTEREST IS 2 M

-----------------------------------------------------
AT 149 MIN, THE MAXIMUM DISTANCE FOR 1 PPM IS 2.58 KM
MAXIMUM TOXIC CORRIDOR LENGTH = 5.43 KM  AT 149 MIN
 DIRECTION & WIDTH  180 +/- 45 DEG

-----------------------------------------------------
```

Nitrogen Tetroxide Spills at VAFB

```
        USAF TOXIC CHEMICAL DISPERSION MODEL
                     AFTOX

Vandenberg AFB
DATE: 03-01-01
TIME: 0200 LST

INSTANTANEOUS RELEASE
NITROGEN TETROXIDE
TEMPERATURE = 5 C
WIND DIRECTION = 0
WIND SPEED = 10 M/S
NIGHTTIME SPILL
CLOUD COVER IS 0 EIGHTHS
GROUND IS DRY
THERE IS NO INVERSION
ATMOSPHERIC STABILITY PARAMETER IS 3.53
SPILL SITE ROUGHNESS LENGTH IS 10 CM

TOTAL AMOUNT SPILLED IS 1200 KG
AREA OF SPILL IS 81 SQ M
CALCULATED POOL TEMPERATURE IS -11.2 C
EVAPORATION RATE IS 101.17 KG/MIN
THE CHEMICAL WILL EVAPORATE IN 11.8 MIN
CONCENTRATION AVERAGING TIME IS 11.86 MIN
ELAPSED TIME SINCE START OF SPILL IS 11 MIN
HEIGHT OF INTEREST IS 2 M

--------------------------------------------------
AT 11 MIN, THE MAXIMUM DISTANCE FOR 1 PPM IS 3.39 KM
MAXIMUM TOXIC CORRIDOR LENGTH = 7.16 KM  AT 12 MIN
 DIRECTION & WIDTH  180 +/- 22 DEG

--------------------------------------------------
```

Nitrogen Tetroxide Spills at CCAFS

```
        USAF TOXIC CHEMICAL DISPERSION MODEL
                      AFTOX

Cape Canaveral AFS
DATE: 03-01-01
TIME: 1400 LST

CONTINUOUS RELEASE
NITROGEN TETROXIDE
TEMPERATURE = 90  F
WIND DIRECTION = 0
WIND SPEED = 4 KNOTS
SUN ELEVATION ANGLE IS 49 DEGREES
CLOUD COVER IS 0 EIGHTHS
GROUND IS DRY
THERE IS NO INVERSION
ATMOSPHERIC STABILITY PARAMETER IS .5
SPILL SITE ROUGHNESS LENGTH IS 10 CM

THIS IS A GAS RELEASE
HEIGHT OF LEAK ABOVE GROUND IS 1 FT
EMISSION RATE IS 240 KG/MIN
ELAPSED TIME OF SPILL IS 5 MIN
TOTAL AMOUNT SPILLED IS 1200 KG
CONCENTRATION AVERAGING TIME IS 5 MIN
ELAPSED TIME SINCE START OF SPILL IS 5 MIN
HEIGHT OF INTEREST IS 6 FT
-----------------------------------------------------
AT 5 MIN, THE MAXIMUM DISTANCE FOR 1 PPM IS 1659 FT
MAXIMUM TOXIC CORRIDOR LENGTH = 1.62 MI  AT 13 MIN
 DIRECTION & WIDTH  180 +/- 75 DEG

-----------------------------------------------------
ELAPSED TIME SINCE START OF SPILL IS 13 MIN
-----------------------------------------------------
AT 13 MIN, THE MAXIMUM DISTANCE FOR 1 PPM IS 4037 FT
MAXIMUM TOXIC CORRIDOR LENGTH = 1.62 MI  AT 13 MIN
 DIRECTION & WIDTH  180 +/- 75 DEG

-----------------------------------------------------
_
```

Nitrogen Tetroxide Spills at CCAFS

```
        USAF TOXIC CHEMICAL DISPERSION MODEL
                     AFTOX

Cape Canaveral AFS
DATE: 03-01-01
TIME: 1400 LST

CONTINUOUS RELEASE
NITROGEN TETROXIDE
TEMPERATURE = 90  F
WIND DIRECTION = 0
WIND SPEED = 20 KNOTS
SUN ELEVATION ANGLE IS 49 DEGREES
CLOUD COVER IS 0 EIGHTHS
GROUND IS DRY
THERE IS NO INVERSION
ATMOSPHERIC STABILITY PARAMETER IS 3.29
SPILL SITE ROUGHNESS LENGTH IS 10 CM

THIS IS A GAS RELEASE
HEIGHT OF LEAK ABOVE GROUND IS 1 FT
EMISSION RATE IS 240 KG/MIN
ELAPSED TIME OF SPILL IS 5 MIN
TOTAL AMOUNT SPILLED IS 1200 KG
CONCENTRATION AVERAGING TIME IS 5 MIN
ELAPSED TIME SINCE START OF SPILL IS 5 MIN
HEIGHT OF INTEREST IS 6 FT
---------------------------------------------------
AT 5 MIN, THE MAXIMUM DISTANCE FOR 1 PPM IS 1.66 MI
MAXIMUM TOXIC CORRIDOR LENGTH = 7.53 MI  AT 12 MIN
 DIRECTION & WIDTH  180 +/- 33 DEG

---------------------------------------------------
ELAPSED TIME SINCE START OF SPILL IS 12 MIN
---------------------------------------------------
AT 12 MIN, THE MAXIMUM DISTANCE FOR 1 PPM IS 3.53 MI
MAXIMUM TOXIC CORRIDOR LENGTH = 7.53 MI  AT 12 MIN
 DIRECTION & WIDTH  180 +/- 33 DEG

---------------------------------------------------
```

Nitrogen Tetroxide Spills at CCAFS

```
        USAF TOXIC CHEMICAL DISPERSION MODEL
                     AFTOX

Cape Canaveral AFS
DATE: 03-01-01
TIME: 0200 LST

INSTANTANEOUS RELEASE
NITROGEN TETROXIDE
TEMPERATURE = 40  F
WIND DIRECTION = 0
WIND SPEED = 4 KNOTS
NIGHTTIME SPILL
CLOUD COVER IS 0 EIGHTHS
GROUND IS DRY
THERE IS NO INVERSION
ATMOSPHERIC STABILITY PARAMETER IS 6
SPILL SITE ROUGHNESS LENGTH IS 10 CM

TOTAL AMOUNT SPILLED IS 1200 KG
AREA OF SPILL IS 874 SQ FT
CALCULATED POOL TEMPERATURE IS -11.2 C
EVAPORATION RATE IS 7.92 KG/MIN
THE CHEMICAL WILL EVAPORATE IN 151.4 MIN
CONCENTRATION AVERAGING TIME IS 60 MIN
ELAPSED TIME SINCE START OF SPILL IS 151 MIN
HEIGHT OF INTEREST IS 6 FT
---------------------------------------------------
AT 151 MIN, THE MAXIMUM DISTANCE FOR 1 PPM IS 1.6 MI
MAXIMUM TOXIC CORRIDOR LENGTH = 3.44 MI  AT 151 MIN
 DIRECTION & WIDTH  180 +/- 45 DEG

---------------------------------------------------
```

Nitrogen Tetroxide Spills at CCAFS

```
        USAF TOXIC CHEMICAL DISPERSION MODEL
                     AFTOX

Cape Canaveral AFS
DATE: 03-01-01
TIME: 0200 LST

INSTANTANEOUS RELEASE
NITROGEN TETROXIDE
TEMPERATURE = 40  F
WIND DIRECTION = 0
WIND SPEED = 20 KNOTS
NIGHTTIME SPILL
CLOUD COVER IS 0 EIGHTHS
GROUND IS DRY
THERE IS NO INVERSION
ATMOSPHERIC STABILITY PARAMETER IS 3.54
SPILL SITE ROUGHNESS LENGTH IS 10 CM

TOTAL AMOUNT SPILLED IS 1200 KG
AREA OF SPILL IS 874 SQ FT
CALCULATED POOL TEMPERATURE IS -11.2 C
EVAPORATION RATE IS 94.92 KG/MIN
THE CHEMICAL WILL EVAPORATE IN 12.6 MIN
CONCENTRATION AVERAGING TIME IS 12.64 MIN
ELAPSED TIME SINCE START OF SPILL IS 12 MIN
HEIGHT OF INTEREST IS 6 FT
---------------------------------------------------
AT 12 MIN, THE MAXIMUM DISTANCE FOR 1 PPM IS 2.12 MI
MAXIMUM TOXIC CORRIDOR LENGTH = 4.45 MI  AT 13 MIN
 DIRECTION & WIDTH  180 +/- 22 DEG

---------------------------------------------------
```

(THIS PAGE INTENTIONALLY LEFT BLANK)

APPENDIX C – NASA ROUTINE PAYLOAD EVALUATION AND DETERMINATION PROCESS AND CHECKLIST

After a proposed spacecraft mission is sufficiently well formulated (usually the Phase B design study), the Sponsoring Entity, in coordination with the local Environmental Management Office (EMO), will prepare an environmental evaluation. An environmental evaluation is a preliminary review that determines what aspects of the proposal are of potential environmental concern. The environmental evaluation also assists in determining the appropriate level of NEPA documentation (*i.e.*, Categorical Exclusion, Environmental Assessment, or Environmental Impact Statement) for the proposal. The local EMO uses a comprehensive checklist to provide a level of rigor to this early evaluation of the proposal, helping to ensure that pertinent considerations are not overlooked. The basis for evaluating the applicability of a Routine Payload classification for a proposed mission is local EMO review of the Routine Payload Checklist (RPC, below) to be completed by the Project Manager for the proposed mission.

The local EMO uses the completed RPC (and required attachments) to evaluate the proposed mission against the NASA Routine Payload Environmental Assessment, determining if unique or unusual circumstances apply. If the RPC evaluation indicates that a NASA Routine Payload categorization may be appropriate, the Sponsoring Entity documents this in an Evaluation Recommendation Package (ERP). The ERP is then processed for review and approval in accordance with established NASA procedures and guidelines. If approved, the ERP would be attached to a Record of Environmental Consideration (REC).

The Sponsoring Entity can then proceed with the proposal while monitoring, to the extent prudent, for changes or circumstances during implementation that could affect classification of the mission as a Routine Payload. If a NASA Routine Payload categorization is determined to be inappropriate, plans will begin for preparation of additional NEPA documentation.

NASA Routine Payload Checklist (1 of 2)

PROJECT NAME: _____ DATE OF LAUNCH: _____

PROJECT CONTACT: _____ PHONE NUMBER: _____ MAILSTOP: _____

PROJECT START DATE: _____ PROJECT LOCATION: _____

PROJECT DESCRIPTION: _____

A. SAMPLE RETURN:	YES	NO
1. Would the candidate mission return a sample from an extraterrestrial body?		
B. RADIOACTIVE SOURCES:	YES	NO
1. Would the candidate spacecraft carry radioactive materials?		
2. If Yes, would the amount of radioactive sources require launch approval at the NASA Associate Administrator level or higher according to NPG 8715.3 (NASA Safety Manual)?		
Provide a copy of the Radioactive Materials Report as per NPG 8715.3 Section 5.5.2.		
C. LAUNCH AND LAUNCH VEHICLES:	YES	NO
1. Would the candidate spacecraft be launched using a launch vehicle/launch complex combination other than those indicated in Table 1 below?		
2. Would the proposed mission cause the annual launch rate for a particular launch vehicle to exceed the launch rate approved or permitted for the affected launch site?		
Comments:		
D. FACILITIES:	YES	NO
1. Would the candidate mission require the construction of any new facilities or substantial modification of existing facilities?		
2. If Yes, has the facility to be modified been listed as eligible or listed as historically significant?		
Provide a brief description of the construction or modification required:		
E. HEALTH AND SAFETY:	YES	NO
1. Would the candidate spacecraft utilize any hazardous propellants, batteries, ordnance, radio frequency transmitter power, or other subsystem components in quantities or levels exceeding the Envelope Payload characteristics (EPCs) in Table 2 below?		
2. Would the candidate spacecraft utilize any potentially hazardous material as part of a flight system whose type or amount precludes acquisition of the necessary permits prior to its use or is not included within the definition of the Envelope Payload (EP)?		
3. Would the candidate mission release material other than propulsion system exhaust or inert gases into the Earth's atmosphere or space?		
4. Would launch of the candidate spacecraft suggest the potential for any substantial impact on public health and safety?		
5. Would the candidate spacecraft utilize a laser system that does not meet the requirements for safe operation (ANSI Z136.1-2000 and ANSI Z136.6-2000)? For Class III-B and IV laser operations, provide a copy of the hazard evaluation and written safety precautions (NPG 8715.3).		
6. Would the candidate spacecraft contain pathogenic microorganisms (including bacteria, protozoa, and viruses) which can produce disease or toxins hazardous to human health?		
Comments:		

continued on next page

NASA Routine Payload Checklist (2 of 2)

PROJECT NAME: _____ DATE OF LAUNCH: _____

PROJECT CONTACT: _____ PHONE NUMBER: _____ MAILSTOP: _____

PROJECT START DATE: _____ PROJECT LOCATION: _____

PROJECT DESCRIPTION: _____

F. OTHER ENVIRONMENTAL ISSUES:	YES	NO
1. Would the candidate spacecraft have the potential for substantial effects on the environment outside the United States?		
2. Would launch and operation of the candidate spacecraft have the potential to create substantial public controversy related to environmental issues?		
Comments:		

Table 1: Launch Vehicles and Launch Pads

Launch Vehicle	Eastern Range (CCAFS Launch Complexes)	Western Range (VAFB Space Launch Complexes)
Atlas IIA & AS	LC-36	SLC-3
Atlas IIIA & B	LC-36	SLC-3
Atlas V Family	LC-41	SLC-3
Delta II Family	LC-17	SLC-2
Delta III	LC-17	N/A
Delta IV Family	LC-37	SLC-6
Athena I & II	LC-46 or -20	California Spaceport
Taurus	LC-46 0r -20	SLC-576E
Titan II	N/A	SLC-4W
Pegasus XL	CCAFS skidstrip KSC SLF	VAFB airfield

Table 2: Summary of Envelope Spacecraft Subsystems and Envelope Payload Characteristics (EPC)

Structure	**Unlimited:** aluminum, magnesium, carbon resin composites, and titanium **Limited:** beryllium [50 kg (110 lb)]
Propulsion	Mono- and bipropellant fuel; 1000 kg (2200 lb) (hydrazine); 1000 kg (2200 lb) (monomethyhydrazine) Bipropellant oxidizer; 1200 kg (2640 lb) (nitrogen tetroxide) Ion-electric fuel; 500 kg (1100 lb) (Xenon) SRM; 600 kg (1320 lb) (AP)-based solid propellant
Communications	Various 10-100 W (RF) transmitters
Power	Solar cells; 150 A-Hr (Ni-H_2) battery; 300 A-Hr (LiSOC) battery; 150 A-Hr (NiCd) battery
Science instruments	10 kW radar ANSI safe lasers (Section 4.1.2.1.3)
Other	Class C EEDs for mechanical systems deployment Radioisotopes limited to quantities that are approved for launch by NASA Nuclear Flight Safety Assurance Manager Propulsion system exhaust and inert gas venting

APPENDIX D – RESPONSES TO PUBLIC COMMENTS

Pete Gunn, 04:07 PM 3/25/2002 -0500, Comments on Draft EA - NASA Routine Payloads on EELVs

From: Pete Gunn <p.gunn@floridaspaceauthority.com>
To: mdahl@hq.nasa.gov
Subject: Comments on Draft EA - NASA Routine Payloads on EELVs
Date: Mon, 25 Mar 2002 16:07:49 -0500
X-Mailer: Internet Mail Service (5.5.2653.19)

Code SM: Perhaps you could expand upon the danger of flying with 110 pounds of beryllium aboard. See page 87. -1A
Also, Light Management Plans (LMP) (see page 120) are written for specific launch sites, not CCAFS wide. On page -1B
33, Florida Space Authority (not Spaceport Florida Authority) does not have any control of LC-20. NASA really needs -1C
an MOU/MOA on disposal of explosive residue on CCAFS or establish a disposal range on KSC property. It does not
make sense to transport hazardous waste across Florida's highways when the Air Force has a sited facility on -1D
CCAFS.

Pete Gunn
Kenneth (Pete) Gunn
Director, Safety & Security
Florida Space Authority
100 Spaceport Way
Cape Canaveral, FL 32920-4003
321-730-5301 ext.1104
Fax 321-730-5307

Printed for Mark Dahl <mdahl@hq.nasa.gov> 1

RESPONSES TO COMMENTS
Comment No. 1: Florida Space Authority
(Pete Gunn)

Response to Comment 1A:
Beryllium (Be) metal is toxic when aerosolized. As stated in paragraph 4.1.1.1 there are no plans to perform activities that would produce Be dust during payload processing, launch, or re-entry. The following sentences were added to the middle of the paragraph:

- In the unlikely event of a launch accident, the anticipated maximum temperature of burning solid propellants, 3,044 K (2,770 C or 5,019 F), is lower than the boiling temperature, 3,243 K (2970 C or 5378 F), of Beryllium metal. There is an even lower likelihood, in an accident scenario, that burning solid propellant pieces would come into direct contact with Beryllium metal or remain in direct contact long enough to transfer sufficient heat to boil Beryllium metal. Vaporization of Beryllium would be highly improbable.

The rationale for the 110-pound value is described in section 2.1.2.

Response to Comment 1B:
Last sentence of the night lighting paragraph under 4.1.9.2.1 has been replaced with the following:

- This has been mitigated by a 45th Space Wing Instruction SWI32-7001 "Exterior Lighting Management" which has been implemented by a series of management plans specific to all active launch complexes as well as the CCAFS Industrial Area. These plans require the use of low-pressure sodium light fixtures, shielding, and special light management steps where lights are visible from the beach areas. Specifically covered are Launch Complexes 17, 20, 36A/B, ITL area, 40, 41 (EELV), 46, 37 (EELV), the Port Canaveral, and Industrial Areas.

Response to Comment 1C:
Comment incorporated.

- All Spaceport Florida Authority changed to Florida Space Authority within EA but not within reference titles.
- Since future launches are not planned from LC-20, we deleted the paragraph on LC-20.

Response to Comment 1D:
The commenter is referred to paragraphs 3.4.1.1. and 3.4.1.2 for a description of hazardous material and hazardous waste management at CCAFS and KSC.

Virginia Commercial Space Flight Authority
P.O. Box 6369
Norfolk, VA 23508

April 12, 2002

Mr. Mark R. Dahl
Program Executive
NASA Headquarters, Code SM
Washington, DC 20546

Dear Mr. Dahl:

On March 14, 2002 NASA published in the Federal Register [Volume 67, Number 50] a notice of a public comment period for the "Draft Environmental Assessment for the Launch of Routine Payloads on Expendable Launch Vehicles from Cape Canaveral Air Force Station Florida and Vandenberg Air Force Base California." This document contains a number of omissions and technical errors that raise questions of propriety, are contrary to the interests of the Federal taxpayer, and damaging to the commercial spaceport located at Wallops.

The paper work reduction portion of the NEPA regulation, 40 CFR part 1504 directs agencies to emphasize information that is useful to decision makers, to tier environmental documents from statements of broad scope to those of narrower scope and to eliminate repetitive discussions. This draft is dedicated to presenting background information addressing existing launch sites, launch vehicles, launch facilities, and payload processing facilities already published in other NEPA documents. In fact the notice published in the Federal Register states:

> "There are no direct or substantial environmental impacts, associated with the proposed action that have not already been covered by NEPA documentation for the existing, launch sites, launch vehicles, launch facilities, and payload processing facilities." (Federal Register, Vol. 67, No. 50, Thursday, March 14, 2002, page 11519).

What quantitative information useful to decision makers is presented by this document that is not -2A
addressed in previous environmental assessments? What significant action of the Federal
Government is addressed by this document that is not addressed in previous environmental -2B

RESPONSES TO COMMENTS
Comment No. 2: Virginia Commercial Space Flight Authority
(Billie M. Reed)

Response to Comment 2A:
Both the Envelope Spacecraft Description and the Routine Payload Checklist provide quantitative information useful to decision makers that is not available in any other document.

Response to Comment 2B:
Chapter 2 describes the proposed action in detail.

documentation? Considering the fact that this document does not present information not already covered by NEPA documentation, is there appropriate justification for publishing it? -2C

NASA regulation 14 CFR Part 1216 section 305 specifies that spacecraft development normally requires an environmental assessment. It is appreciated that one purpose of this document might have been to address the environmental impacts associated with the decision to proceed with the manufacture of a routine spacecraft. If this is the case where is the information recommended in 40 CFR Part 1502 regarding the development and manufacture of the spacecraft envisioned to be covered by this document? -2D

The summary and document state " The spacecraft covered by this DEA would meet rigorously defined criteria ensuring that the spacecraft (routine payloads), their operation, and their decommissioning would not present any new or substantial environmental and safety concerns." Surprisingly these rigorous criteria are published in their entirety in the Federal Register notice. Among the list of criteria used to evaluate a payload are the launch sites. Why does this document, prepared by NASA to address launching NASA payloads, omit the one launch site owned by NASA, particularly when this launch site is capable of meeting all other launch site criteria listed in both the summary and document? -2E

40 CFR Part 1502.23 requires, at a minimum, consideration of cost benefit analysis of relevant factors not directly related to environmental quality, but which are likely to be relevant and important to a decision. What is the cost impact associated with launching NASA payloads from non-NASA ranges when a suitable NASA range exists for launch of payloads within in the scope of this document? -2F

Finally, the draft does not contain a list of preparers as required by 40 CFR Part 1502.17. Who prepared this document and what is their relevant experience and expertise? -2G

We request written responses to these issues and questions prior to NASA taking the next step in releasing this document. Thank you for considering our comments.

Sincerely,

Billie M. Reed
Executive Director

RESPONSES TO COMMENTS
Comment No. 2: Virginia Commercial Space Flight Authority
(Billie M. Reed)

Response to Comment 2C:
For the above reasons, and to do as the reviewer suggests and as CEQ regulations encourage, we have prepared a single EA for a set of actions similar in type, time, and location.

Response to Comment 2D:
This document addresses the potential environmental impacts of implementing routine payload missions. This environmental assessment does not cover industrial facilities used to manufacture spacecraft.

Response to Comment 2E:
We assume that the comment refers to the commercial spaceport at Wallops. In preparing this EA, there were no Earth or space science missions forecast for launch from Wallops in the 2002-2012 time frame. This document will be reviewed regularly for currency as per paragraph 1.3.

Response to Comment 2F:
A cost/benefit analysis is not applicable to the purpose of this EA.

Response to Comment 2G:
CEQ regulations do not require publishing a list of preparers in the context of an EA.

RESPONSES TO COMMENTS
Comment No. 3: Kistler Aerospace Corporation
(George E. Mueller)

KISTLER aerospace corporation

3760 Carillon Point
Kirkland, Washington 98033
Telephone 425 889.2001 - Fax 425 803.3303

George E. Mueller
Chief Executive Officer

April 15, 2002

Mark R. Dahl
Program Executive
NASA Headquarters, Code SM
Washington, DC 20546.
mdahl@hq.nasa.gov

RE: Draft Environmental Assessment for Launch of NASA Routine Payloads on Expendable Launch Vehicles from Cape Canaveral Air Force Station Florida and Vandenberg Air Force Base California

Dear Mr. Dahl:

Kistler Aerospace Corporation appreciates the opportunity to comment on NASA's Draft Environmental Assessment (DEA) for Launch of NASA Routine Payloads on Expendable Launch Vehicles from Cape Canaveral Air Force Station Florida and Vandenberg Air Force Base California. An attachment to this letter contains Kistler's detailed comments on the DEA.

As you may be aware, Kistler is developing the first privately funded, fully reusable satellite launch vehicle, the K-1. The K-1 is being developed primarily to service the Low Earth Orbit (LEO) market that includes commercial communications satellites, ISS resupply, and scientific and military LEO payloads. These payloads (in particular ISS resupply) are precisely the kinds of payloads included in the category of NASA Routine Payloads (NRP) defined in the Draft Environmental Assessment (DEA).

In light of this, the subject DEA, which considers only Expendable Launch Vehicles (ELVs) operating from government-owned sites, raises concerns that NASA is biasing the launch service selection process and that, consequently, NASA will not realize the cost savings that Reusable Launch Vehicles (RLVs) such as the K-1 could offer. Our comments in the attachment reflect these concerns.

If you have any questions on these comments to the DEA, please contact Paul Birkeland, our lead engineer for Kistler's domestic licensing. He can be reached at 425-889-2001, or at pbirkeland@kistleraero.com.

Regards,

Attachment

Kistler Aerospace Corporation April 15, 2002
Page 1

Attachment A:
Kistler Aerospace Corporation Comments on Draft Environmental Assessment (DEA) for Launch of NASA Routine Payloads on Expendable Launch Vehicles from Cape Canaveral Air Force Station Florida and Vandenberg Air Force Base California

1) Approval of the DEA Would Bias Launch Selection Processes for NASA Programs -3A

Kistler is aware that one of the purposes of this DEA is to provide a source of environmental impact data for NASA payload programs to tier off when undertaking their own environmental assessments. Kistler believes that if this DEA is approved, then payload program offices, working under time and resource constraints, will simply choose one of the service providers identified in the DEA as the "path of least resistance." Consequently, approval of this DEA results in a biasing of the launch selection process at the program level.

This unfortunate bias would mean that NASA will be less likely to benefit from the cost savings that Kistler could provide, cost savings that could be used to expand current programs or initiate new ones.

2) DEA Appears to Conflict with U.S. and NASA Commercialization Goals -3B

In the Commercial Space Act of 1998, Congress affirmed its intent to utilize the International Space Station to facilitate commercial development of space. The CSA states in part (emphasis added):

> "The Congress further declares that the use of free market principles in operation, ***servicing***, allocating the use of and adding capabilities to the Space Station and ***the resulting fullest possible engagement of commercial providers*** and participation of commercial users will reduce Space Station operational costs for all partners and the Federal Government's share of the United States burden to fund operations."
>
> *Commercial Space Act 1998.*

This would indicate that ISS resupply should be used to fully engage commercial providers. The DEA, as currently formulated, discourages this engagement.

NASA's Enhanced Strategy for the Development of Space Commerce (September 24, 2001 Draft) states that NASA policy should be developed to (emphasis added):

> "Encourage commercial development across all areas of ISS utilization, ***operations***, and evolutionary growth."
>
> *Section IV: International Space Station Specific Policies*
> *Enhanced Strategy for the Development of Space Commerce*

And to:

> "Encourage and support national and international incentives that ***encourage private sector investment in space-related activities***."
>
> *Goal 4, Objective 2*
> *Enhanced Strategy for the Development of Space Commerce*

RESPONSES TO COMMENTS
Comment No. 3: Kistler Aerospace Corporation
(George E. Mueller)

Response to Comment 3A:
There is no bias in launch vehicle selection. This EA only addresses existing vehicles and facilities. New vehicles or facilities could be added, as appropriate, during future reviews. Procurement of launch vehicles or launch services for a specific mission is subject to applicable procurement regulations and policies.

Response to Comment 3B:
No conflict exists with commercialization goals. The Proposed Action includes launch sites used for commercial interests. ISS resupply activities are outside of the scope of this EA.

Kistler Aerospace Corporation April 15, 2002
Page 2

Finally, recognizing the impact that NASA activities have on commercial competition, the Draft Strategy states that NASA must:

> "Preserve a 'level playing field' by avoiding inappropriate competition between for-profit commercial companies and non-profit or governmentally subsidized entities."
>
> *Goal 1, Objective 4*
> *Enhanced Strategy for the Development of Space Commerce*

NASA should be aware that Kistler undertook environmental assessments *at its own expense* as part of its licensing efforts in Australia and Nevada. The Australian environmental review has been completed and approved. The domestic Environmental Assessment is due to be published by the FAA this spring.

The DEA, on the other hand, uses government funding to undertake analyses and review that commercial launch providers such as Kistler must undertake on their own.

2a) Specific Comment: Broader Scoping, Possibly a Formal Scoping Process, is Required -3C

Kistler believes that the subject DEA is too narrowly scoped. No rationale is given for not considering other domestic launch sites and launch vehicles. De-scoping of launch sites outside of Cape Canaveral AFS and Vandenberg AFB means that NASA is less likely to accrue any benefit from new developments such as Kistler's.

Kistler believes that the purpose of the National Environmental Policy Act (NEPA) regulations is to make certain that environmental impacts are considered in any decision-making process. By eliminating consideration of other launch sites and systems *a priori*, and leaving only the "No Action" alternative, NASA is presenting a false dichotomy that precludes any genuine comparison of environmental impacts by payload program offices.

At the very least, broader industry input should have been solicited at the beginning of the process. Kistler feels that the DEA could be significantly improved through the use of a formal scoping process. Indeed, without broader scoping the DEA will be invalid.

2b) Specific Comment: Foreign Launch Sites Are Inappropriately Eliminated from Consideration -3D

The DEA states that foreign launch sites were not considered for two reasons – there is a lack of knowledge of environmental conditions at those sites, and the definition of NRPs precludes consideration of any non-routine requirements.

RESPONSES TO COMMENTS
Comment No. 3: Kistler Aerospace Corporation
(George E. Mueller)

Response to Comment 3C:
Formal scoping is not required for an EA. Other launch sites could be added in the future.

Response to Comment 3D:
Foreign launch sites are outside the scope of the definition of routine payloads. As stated in Paragraph 2.3, Alternatives to the Proposed Action, additional review and documentation would be required for foreign launch sites. This does not preclude the potential use of foreign sites.

Kistler Aerospace Corporation

April 15, 2002
Page 3

Kistler feels that its launch site in Australia meets the requirements for NRP consideration. As mentioned above, Kistler has completed its environmental review process with the Commonwealth Government in Australia. The analyses and documentation undertaken for that review are publicly available.

Furthermore, Kistler has routinely received International Traffic in Arms Regulation (ITAR) approval for the export of technical data to Australia. There is nothing "non-routine" in this process, and hundreds of U.S. companies carry out ITAR-approved transactions every day. If NASA wishes to exclude foreign launch sites on the basis of their being "non-routine," then the specific aspects of the process that preclude the NRP designation should be identified. -3E

RESPONSES TO COMMENTS
Comment No. 3: Kistler Aerospace Corporation
(George E. Mueller)

Response to Comment 3E:
The specific process is as described in Paragraph 2.2 and Appendix C.

Santa Barbara County
Air Pollution Control District

April 8, 2002

Mark R. Dahl, Program Executive
Office of Space Science
Code SM
NASA Headquarters
Washington, DC 20546-0001

RE: Draft Environmental Assessment for Launch of NASA Routine Payloads on Expendable launch Vehicles

Dear Mr. Dahl,

The Santa Barbara County Air Pollution Control District (SBCAPCD) appreciates the opportunity to comment on the Draft EA for the above-mentioned project.

The document states on Page 109, that a CAA Conformity Determination is not needed for CCAFS because it is located in an area that is in full attainment with NAAQS. Please note that although Santa Barbara County has attained the federal one-hour standard for ozone, the County is still designated a serious nonattainment area for ozone until the USEPA re-designates it to attainment. Unless the project is otherwise exempt under SBCAPCD Rule 702, a conformity determination is required for this federal action. -4A

We look forward to receiving a response to our comment. If you have questions please call me at (805) 961-8893 or e-mail: vtj@sbcapcd.org.

Sincerely,

Vijaya Jammalamadaka, AICP
Air Quality Specialist
Technology and Environmental Review Division

cc: Michael Goldman
Project File
TEA Chron File

\\NT3\GROUPS\PCA\WP\PCACORR\NASA ROUTINE PAYLOADS ON ELVS EA.DOC

Douglas W. Allard — Air Pollution Control Officer
26 Castilian Drive B-23, Goleta, CA 93117 Fax: 805-961-8801 Phone: 805-961-8800

RESPONSES TO COMMENTS
Comment No. 4: Santa Barbara County Air Pollution Control District
(Vijaya Jammalamadaka)

Response to Comment 4A:
Clean Air Act (CAA) Conformity Applicability Analyses for EELV operations (i.e., the largest of the launch vehicles considered in this action) have established that EELV operations meet de minimis requirements and are not considered a regionally significant action. (USAF, 2000a) Table 4.1-7 in this EA illustrates the VOC and NOx emmissions from the five largest ELVs considered in this EA. The EELV vehicles represent 4 of the 5 vehicles and emit more than an order of magnitude more ozone precursors than the Titan II. Therefore, use of any other ELV considered in this EA will be equally or less polluting than the EELV ELVs. Hence, the emissions from any launch vehicle considered in this EA are de minimus and are not considered regionally significant. Review of the CAA Conformity Analyses for DSCS (USAF, 1995) and EOS (NASA, 1997b) payload EAs documents that those payload processing operations contribute only a small fraction (~ 1/25) of the emissions associated with the EELV launch and operations. The fraction-of-a-ton quantity exemplified by DSCS and EOS payload processing EAs represent the quantities and processes considered routine in this EA and are de minimis and not regionally significant. Therefore, further CAA conformity analyses pursuant to 40 CFR 93.153(c) are not required, and this action does not require a new CAA Conformity Determination. As documented previously in the EELV conformity analysis, SBCAPCD's Rule 702 is adopted from the federal General Conformity regulation, and the EELV conformity analysis satisfied both the state and the federal requirements. This EA considers launches within the approved and analyzed launch rates, hence does not add any launches or their impacts. As stated in Paragraph 2.2, checklist Item 4, a proposed mission that would exceed the approved launch rates must consult with the appropriate launch support organizations for further analysis.

The text in the Final EA was revised as documented on the following pages.

RESPONSES TO COMMENTS
Comment No. 4: Santa Barbara County Air Pollution Control District
(Vijaya Jammalamadaka)

Response to Comment 4A (continued):
The following changes were made to the FEA:

Page 3, Air Quality, 2nd Paragraph, WAS:
"The air quality impacts of ongoing and routine operations at the launch facilities have been considered in previous NEPA documentation (Appendix A). With respect to local air quality, only VAFB is in a non-attainment area for ozone. The conformity determination under the Clean Air Act Section 176 indicates that the proposed action would not contribute substantially to the formation of ozone and ozone precursors."
Revision:
"The air quality impacts of ongoing and routine operations at the launch facilities have been considered in previous NEPA documentation (Appendix A). With respect to local air quality, only VAFB is in a non-attainment area for ozone. The conformity analysis under the Clean Air Act Section 176 indicates that the proposed action would not contribute substantially to the formation of ozone and ozone precursors."

4.1.5.3 Clean Air Act Conformity, Page 109, Paragraph 1, WAS:
A Clean Air Act Conformity Determination is necessary for the proposed action because VAFB is located within the SBCAPCD, which is in non-attainment for the ozone ambient air quality standard. The government is required to make a formal determination as to whether operations comply with the General Conformity Rule of the Clean Air Act. Section 176 (c) requires all Federal agencies or agency-supported activities to comply, where applicable, with an approved or promulgated State Implementation Plan (SIP) or Federal Implementation Plan (FIP). Conformity means compliance with a plan's purpose of attaining or maintaining the NAAQS. Specifically, this means ensuring the activity would not: 1) cause a new violation of the NAAQS; 2) contribute to an increase in the frequency or severity of existing NAAQS violations; or 3) delay the timely attainment of any NAAQS, interim milestones, or other milestones to achieve attainment (USAF, 1995b).
Revision:
Clean Air Act (CAA) Conformity Applicability Analyses for EELV operations (i.e., the largest of the launch vehicles considered in this action) have established that EELV operations meet de minimis requirements and are not considered a regionally significant action. (USAF, 2000a) Table 4.1-7 in this EA illustrates the VOC and NOx emmissions from the five largest ELVs considered in this EA. The EELV vehicles represent 4 of the 5 vehicles and emit more than an order of magnitude more ozone precursors than the Titan II. Therefore, use of any other ELV considered in this EA will be equally or less polluting than the EELV ELVs. Hence, the emissions from any launch vehicle considered in this EA are de minimus and are not considered regionally significant. Review of the CAA Conformity Analyses for DSCS (USAF, 1995) and EOS (NASA, 1997b) payload EAs documents that those payload processing operations contribute only a small fraction (~ 1/25) of the emissions associated with the EELV launch and operations. The fraction-of-a-ton quantity exemplified by DSCS and EOS payload processing EAs represent the quantities and processes considered routine in this EA and are de minimis and not regionally significant. Therefore, further CAA conformity analyses pursuant to 40 CFR 93.153(c) are not required, and this action does not require a new CAA Conformity Determination. As documented previously in the EELV conformity analysis, SBCAPCD's Rule 702 is adopted from the federal General Conformity regulation, and the EELV conformity analysis satisfied both the state and the federal requirements. This EA considers launches within the approved and analyzed launch rates, hence does not add any launches or their impacts. As stated in Paragraph 2.2, checklist Item 4, a proposed mission that would exceed the approved launch rates must consult with the appropriate launch support organizations for further analysis.

VAFB is located within the SBCAPCD, which has been in non-attainment for the ozone ambient air quality standard. Santa Barbara County has attained the federal one-hour standard for ozone, but the County is still designated a serious non-attainment area for ozone until the US EPA re-designates it to attainment. The government is required to make a formal determination as to whether operations comply with the General Conformity Rule of the Clean Air Act. Section 176 (c) requires all Federal agencies or agency-supported activities to comply, where applicable, with an approved or promulgated State Implementation Plan (SIP) or Federal Implementation Plan (FIP). Conformity means compliance with a plan's purpose of attaining or maintaining the NAAQS. Specifically, this means ensuring the activity would not: 1) cause a new violation of the NAAQS; 2) contribute to an increase in the frequency or severity of existing NAAQS violations; or 3) delay the timely attainment of any NAAQS, interim milestones, or other milestones to achieve attainment (USAF, 1995b)." The rule does not apply to actions where the total direct and indirect emission of nonattainment criteria pollutants do not exceed threshold levels for criteria pollutants established in 40 CFR 93.135(b). In addition to meeting de minimus requirements, a federal action is considered regionally significant when the total emissions from the action equal or exceed 10 percent of the air quality control area's emission inventory for any criteria pollutant. If a federal action meets de minimis requirements and is not considered a regionally significant action, then it is exempt from further conformity analyses pursuant to 40 CFR 93.153(c).

DIVISIONS OF FLORIDA DEPARTMENT OF STATE
Office of the Secretary
Office of International Relations
Division of Elections
Division of Corporations
Division of Cultural Affairs
Division of Historical Resources
Division of Library and Information Services
Division of Licensing
Division of Administrative Services

FLORIDA DEPARTMENT OF STATE
Katherine Harris
Secretary of State
DIVISION OF HISTORICAL RESOURCES

MEMBER OF THE FLORIDA CABINET
State Board of Education
Trustees of the Internal Improvement Trust Fund
Administration Commission
Florida Land and Water Adjudicatory Commission
Siting Board
Division of Bond Finance
Department of Revenue
Department of Law Enforcement
Department of Highway Safety and Motor Vehicles
Department of Veterans' Affairs

Mr. Mark R. Dahl
National Aeronautics and Space Administration
NASA Headquarters
Office of Space Science
Code SM
Washington, DC 20546-0001

April 15, 2002

RE: DHR No. 2002-02195
Received by DHR: March 15, 2002
NASA – Draft Environmental Assessment – Launch of Routine Payloads on Expendable Launch Vehicles from Cape Canaveral Air Force Station
Brevard County, Florida

Dear Mr. Dahl:

Our office received and reviewed the above referenced project in accordance with Section 106 of the *National Historic Preservation Act of 1966* (Public Law 89-665), as amended in 1992, and *36 C.F.R., Part 800: Protection of Historic Properties*. The State Historic Preservation Officer is to advise Federal agencies when identifying historic properties (listed or eligible for listing, in the *National Register of Historic Places*), assessing effects upon them, and considering alternatives to avoid or minimize adverse effects.

We have reviewed sections 3.13.1 and 4.1.10, both dealing with Cultural Resources, of the referenced draft environmental assessment. Based on the information provided, it is the opinion of this office that the proposed undertaking will have no effect on historic properties. -5A

If there are any questions concerning our comments or recommendations, please contact Sarah Jalving, Historic Sites Specialist, by electronic mail at sjalving@mail.dos.state.fl.us or at 850-245-6333 or SunCom 205-6333. Thank you for your interest in protecting Florida's historic properties.

Sincerely,

Janet Snyder Matthews, Ph.D., Director, and
State Historic Preservation Officer

500 S. Bronough Street • Tallahassee, FL 32399-0250 • http://www.flheritage.com

☐ Director's Office (850) 245-6300 • FAX: 245-6435
☐ Archaeological Research (850) 245-6444 • FAX: 245-6436
☒ Historic Preservation (850) 245-6333 • FAX: 245-6437
☐ Historical Museums (850) 245-6400 • FAX: 245-6433
☐ Palm Beach Regional Office (561) 279-1475 • FAX: 279-1476
☐ St. Augustine Regional Office (904) 825-5045 • FAX: 825-5044
☐ Tampa Regional Office (813) 272-3843 • FAX: 272-2340

RESPONSES TO COMMENTS
Comment No. 5: Florida Department of State, Division of Historical Resources
(Janet Snyder Matthews, Ph.D.)

Response to Comment 5A:
Response acknowledged.

04/30/2002 15:57 850-487-2899 FLA.COAST MGMT PGM PAGE 02

Add Agency Comments Page 1 of 1

Clearinghouse

Home
My In-Box
New Project
Search Project
DB Maintenance
Help

Public Area

Brochure
Manual

help | faq | feedback | directory

email Governor Jeb Bush
Gov. Bush's E-Newsletter

STATE CLEARINGHOUSE

Home > My In-Box > Search Project > **Add Agency Comments**

User: VANESSA HOLMES, , Clearinghouse

Project Information

Project: FL200203201687C

Description: National Aeronautics and Space Administration - Draft Environmental Assessment - Launch of NASA Routine Payloads on Expendable Launch Vehicles from Cape Canaveral Air Force Station and Vandenberg Air Force Base California - March 2002 - Brevard County, Florida.

Keywords: NASA - DEA - Launch of Routine Payloads - Cape Can

Program:

Review Comments 1/10

Agency: COMMUNITY AFFAIRS

Date: 04/18/2002 (mm/dd/yyyy)

Description: NC -6A

Comment Type: Draft Final

Copyright© 2000 State Of Florida
Privacy Statement

RESPONSES TO COMMENTS
Comment No. 6: Florida State Clearinghouse, Community Affairs (Unknown)

Response to Comment 6A:
Response acknowledged.

04/30/2002 15:57 858-487-2899 FLA.COAST MGMT PGN PAGE 03

Add Agency Comments

Page 1 of 1

Clearinghouse

Home
My In-Box
New Project
Search Project
DB Maintenance
Help

Public Area
Brochure
Manual

Help | [illegible] | feedback | directory

email Governor Job Bush
Gov. Bush's E-Newsletter

STATE CLEARINGHOUSE

Home > My In-Box > Search Project > Add Agency Comments
User: VANESSA HOLMES, , Clearinghouse

Project Information

Project: FL200203201687C

Description: National Aeronautics and Space Administration - Draft Environmental Assessment - Launch of NASA Routine Payloads on Expendable Launch Vehicles from Cape Canaveral Air Force Station and Vandenberg Air Force Base California - March 2002 - Brevard County, Florida.

Keywords: NASA - DEA - Launch of Routine Payloads - Cape Can

Program:

Review Comments 2/18

Agency: ENVIRONMENTAL PROTECTION

Date: 04/19/2002 (mm/dd/yyyy)

Description: No comments; consistent -7A

Comment Type: Draft Final

Copyright© 2000 State Of Florida
Privacy Statement

APR 30 '02 13:37 858 487 2899 PAGE.03

RESPONSES TO COMMENTS
Comment No. 7: Florida State Clearinghouse, Environmental Protection (Unknown)

Response to Comment 7A:
Response acknowledged.

04/30/2002 15:57 850-487-2899 FLA.COAST MGMT PGM PAGE 04

Add Agency Comments Page 1 of 1

Clearinghouse

Home
My In-Box
New Project
Search Project
DR Maintenance
Help

Public Area
Brochure
About

help | feedback | directory

STATE CLEARINGHOUSE

Home > My In-Box > Search Project > Add Agency Comments
User: VANESSA HOLMES, , Clearinghouse

Project Information

Project: FL200203201687C

Description: National Aeronautics and Space Administration - Draft Environmental Assessment - Launch of NASA Routine Payloads on Expendable Launch Vehicles from Cape Canaveral Air Force Station and Vandenberg Air Force Base California - March 2002 - Brevard County, Florida.

Keywords: NASA - DEA - Launch of Routine Payloads - Cape Can

Program:

Review Comments 3/10

Agency: FISH and WILDLIFE COMMISSION

Date: 03/27/2002 (mm/dd/yyyy)

Description: NC by Brian Barnett. -8A

Comment Type: Draft Final

Copyright© 2000 State Of Florida
Privacy Statement

APR 30 '02 13:37 850 487 2899 PAGE.04

RESPONSES TO COMMENTS
Comment No. 8: Florida State Clearinghouse, Fish and Wildlife Commission
(Brian Barnett)

Response to Comment 8A:
Response acknowledged.

04/30/2002 15:57 858-487-2899 FLA.COAST MGMT PGN PAGE 05

Add Agency Comments

Page 1 of 1

Clearinghouse

Home
My In-Box
New Project
Search Project
DB Maintenance
Help

Public Area

Resources
Manual

help | FAQ | feedback | directory

Email Governor Jeb Bush
Gov. Bush's E-Newsletter

STATE CLEARINGHOUSE

Home > My In-Box > Search Project > Add Agency Comments
User: VANESSA HOLMES, , Clearinghouse

Project Information

Project: FL200203201687C

Description: National Aeronautics and Space Administration - Draft Environmental Assessment - Launch of NASA Routine Payloads on Expendable Launch Vehicles from Cape Canaveral Air Force Station and Vandenberg Air Force Base California - March 2002 - Brevard County, Florida.

Keywords: NASA - DEA - Launch of Routine Payloads - Cape Can

Program:

Review Comments 4/10

Agency: STATE

Date: 04/08/2002 (mm/dd/yyyy)

Description: We have reviewed sections 3.19.1 and 4.1.10, both dealing with Cultural Resources, of the referenced draft environmental assessment. Based on the information provided, it is the opinion of this office that the proposed undertaking will have no effect on historic -9A

Comment Type: Draft Final

Copyright© 2000 State Of Florida
Privacy Statement

APR 30 '02 13:38 858 487 2899 PAGE.05

RESPONSES TO COMMENTS
Comment No. 9: Florida State Clearinghouse, State (Unknown)

Response to Comment 9A:
Response acknowledged.

04/30/2002 15:57 850-487-2899 FLA.COAST MGMT PGM PAGE 06

Add Agency Comments Page 1 of 1

Clearinghouse

Home
My In-Box
New Project
Search Project
DB Maintenance
Help

Public Area
Brochure
Manual

email Governor Jeb Bush
Gov. Bush's E-Newsletter

STATE CLEARINGHOUSE

Home > My In-Box > Search Project > Add Agency Comments
User: VANESSA HOLMES, , Clearinghouse

Project Information

Project: FL200203201687C

Description: National Aeronautics and Space Administration - Draft Environmental Assessment - Launch of NASA Routine Payloads on Expendable Launch Vehicles from Cape Canaveral Air Force Station and Vandenberg Air Force Base California - March 2002 - Brevard County, Florida.

Keywords: NASA - DEA - Launch of Routine Payloads - Cape Can

Program:

Review Comments 5/10

Agency: TRANSPORTATION

Date: 04/03/2002 (mm/dd/yyyy)

Description: TC -10A

Comment Type: Draft Final

Copyright© 2000 State Of Florida
Privacy Statement

APR 30 '02 13:30 850 487 2899 PAGE.05

RESPONSES TO COMMENTS
Comment No. 10: Florida State Clearinghouse, Transportation (Unknown)

Response to Comment 10A:
Response acknowledged.

04/30/2002 15:57 850-487-2899 FLA.COAST MGMT PGM PAGE 07

Add Agency Comments

Page 1 of 1

Clearinghouse

Home
My In-Box
New Project
Search Project
DB Maintenance
Help

Public Area
Brochure
Manual

help | [illegible] | feedback | directory

email Governor Job Bush
Gov. Bush's E-Newsletter

STATE CLEARINGHOUSE

Home > My In-Box > Search Project > Add Agency Comments
User: VANESSA HOLMES, , Clearinghouse

Project Information

Project: FL200203201687C

Description: National Aeronautics and Space Administration - Draft Environmental Assessment - Launch of NASA Routine Payloads on Expendable Launch Vehicles from Cape Canaveral Air Force Station and Vandenberg Air Force Base California - March 2002 - Brevard County, Florida.

Keywords: NASA - DEA - Launch of Routine Payloads - Cape Can

Program:

Review Comments 8/10

Agency: ST. JOHNS RIVER WMD

Date: 04/03/2002 (mm/dd/yyyy)

Description: No comment. -11A

Comment Type: Draft Final

Copyright© 2000 State Of Florida
Privacy Statement

APR 30 '02 13:38 850 487 2899 PAGE.07

RESPONSES TO COMMENTS
Comment No. 11: Florida State Clearinghouse, St. Johns River Water Management District
(Unknown)

Response to Comment 11A:
Response acknowledged.

04/30/2002 15:57 850-487-2899 FLA.COAST NGHT PGM PAGE 08

Add Agency Comments

Page 1 of 1

help | 411 | feedback | directory

STATE CLEARINGHOUSE

Home > My In-Box > Search Project > Add Agency Comments

User: VANESSA HOLMES, , Clearinghouse

Clearinghouse

Home

My In-Box

New Project

Search Project

DB Maintenance

Help

Public Area

Brochure

Manual

Project Information

Project: PL200203201687C

Description: National Aeronautics and Space Administration - Draft Environmental Assessment - Launch of NASA Routine Payloads on Expendable Launch Vehicles from Cape Canaveral Air Force Station and Vandenberg Air Force Base California - March 2002 - Brevard County, Florida.

Keywords: NASA - DEA - Launch of Routine Payloads - Cape Can

Program:

Review Comments 7/10

Agency: ENVIRONMENTAL POLICY UNIT

Date: (mm/dd/yyyy)

Description: -12A

Comment Type: Draft Final

Copyright© 2020 State Of Florida
Privacy Statement

APR 30 '02 13:38 850 487 2899 PAGE.08

RESPONSES TO COMMENTS

Comment No. 12: Florida State Clearinghouse, Environmental Policy Unit (Unknown)

Response to Comment 12A:
No Comment acknowledged.

04/30/2002 15:57 850-487-2899 FLA.COAST MGMT PGM PAGE 09

Add Agency Comments

Page 1 of 1

Clearinghouse

Home
My In-Box
New Project
Search Project
DB Maintenance
Help

Public Area
Brochure
Manual

Help | Feedback | Directory

Email Governor Jeb Bush
Gov. Bush's E-Newsletter

STATE CLEARINGHOUSE

Home > My In-Box > Search Project > **Add Agency Comments**
User: VANESSA HOLMES, , Clearinghouse

Project Information

Project: FL200203201687C

Description: National Aeronautics and Space Administration - Draft Environmental Assessment - Launch of NASA Routine Payloads on Expendable Launch Vehicles from Cape Canaveral Air Force Station and Vandenberg Air Force Base California - March 2002 - Brevard County, Florida.

Keywords: NASA - DEA - Launch of Routine Payloads - Cape Can

Program:

Review Comments 8/10

Agency: COASTAL MANAGEMENT PROGRAM

Date: 04/18/2002 (mm/dd/yyyy)

Description: SC -13A

Comment Type: Draft Final

Copyright© 2000 State Of Florida
Privacy Statement

APR 30 '02 13:39 850 487 2899 PAGE.09

RESPONSES TO COMMENTS
Comment No. 13: Florida State Clearinghouse, Coastal Management Program (Unknown)

Response to Comment 13A:
Response acknowledged.

04/30/2002 15:57 850-487-2899 FLA.COAST NGMT PGM PAGE 18

Add Agency Comments

Page 1 of 1

Clearinghouse

Home
My In-Box
New Project
Search Project
DB Maintenance
Help

Public Area
Brochure
Manual

Help | All | feedback | directory

Email Governor Job Bank
Gov. Bush's E-Newsletter

STATE CLEARINGHOUSE

Home > My In-Box > Search Project > **Add Agency Comments**

User: VANESSA HOLMES, , Clearinghouse

Project Information

Project: FL200203201687C

Description: National Aeronautics and Space Administration - Draft Environmental Assessment - Launch of NASA Routine Payloads on Expendable Launch Vehicles from Cape Canaveral Air Force Station and Vandenberg Air Force Base California - March 2002 - Brevard County, Florida.

Keywords: NASA - DEA - Launch of Routine Payloads - Cape Can

Program:

Review Comments 9/10

Agency: COMMUNITY PLANNING

Date: 04/09/2002 (mm/dd/yyyy)

Description: NC -14A

Comment Type: Draft Final

Copyright© 2000 State Of Florida
Privacy Statement

APR 30 '02 13:39 850 487 2899 PAGE.18

RESPONSES TO COMMENTS
Comment No. 14: Florida State Clearinghouse, Community Planning (Unknown)

Response to Comment 14A:
Response acknowledged.

04/30/2002 15:57 850-487-2899 FLA.COAST MGMT PGM PAGE 11

Update Agency Comments

Page 1 of 1

Clearinghouse

Home
My In-Box
New Project
Search Project
DB Maintenance
Help

Public Area
Brochure
Manual

help | 4 | feedback | directory

Gov. Bank's E-Newsletter

STATE CLEARINGHOUSE

Home > My In-Box > Search Project > **Update Agency Comments**

User: VANESSA HOLMES, , Clearinghouse

Project Information

Project: FL200203201687C

Description: National Aeronautics and Space Administration - Draft Environmental Assessment - Launch of NASA Routine Payloads on Expendable Launch Vehicles from Cape Canaveral Air Force Station and Vandenberg Air Force Base California - March 2002 - Brevard County, Florida.

Keywords: NASA - DEA - Launch of Routine Payloads - Cape Can

Program:

Review Comments 10/10

Agency: EMERGENCY MANAGEMENT

Date: 04/15/2002 (mm/dd/yyyy)

Description: NC -15A

Comment Type: Draft Final

Copyright© 2000 State Of Florida
Privacy Statement

APR 30 '02 13:39 850 487 2899 PAGE.11

RESPONSES TO COMMENTS

Comment No. 15: Florida State Clearinghouse, Emergency Management (Unknown)

Response to Comment 15A:
Response acknowledged.

STATE OF FLORIDA
DEPARTMENT OF COMMUNITY AFFAIRS
"Dedicated to making Florida a better place to call home"

JEB BUSH
Governor

STEVEN M. SEIBERT
Secretary

May 14, 2002

Mr. Mark Dahl
Program Executive
Code SM
National Aeronautics and Space
Administration Headquarters
Washington, DC 20546

RE: National Aeronautics and Space Administration (NASA) - Draft Environmental Assessment - Launch of NASA Routine Payloads on Expendable Launch Vehicles from Cape Canaveral Air Force Station and Vandenberg Air Force Base California - March 2002 - Brevard County, Florida
SAI: FL200203201687C

Dear Mr. Dahl:

The Florida State Clearinghouse, pursuant to Presidential Executive Order 12372, Gubernatorial Executive Order 95-359, the Coastal Zone Management Act, 16 U.S.C. §§ 1451-1464, as amended, and the National Environmental Policy Act, 42 U.S.C. §§ 4321, 4331-4335,4341-4347, as amended, has coordinated a review of the above-referenced project.

The Department of State (DOS) notes that the proposed project will have no effect on historic properties listed, eligible for listing in the National Register or of other historical or architectural value, the project is considered consistent with the historic preservation Laws included in the Florida Coastal Management Program. Please refer to the enclosed DOS comments.

Based on the information contained in the Environmental Assessment and the enclosed comments provided by our reviewing agencies, the state has determined that the referenced project is consistent with the Florida Coastal Management Program. -16A

Thank you for the opportunity to review this project. Should questions arise regarding this letter, please call Ms. Jasmin Raffington at (850) 922-5438.

Sincerely,

Chris McCay

for Shirley W. Collins, Acting Administrator
Florida Coastal Management Program

SWC:jj

Enclosures

2555 SHUMARD OAK BOULEVARD • TALLAHASSEE, FLORIDA 32399-2100
Phone: 850.488.8466/Suncom 278.8466 FAX: 850.921.0781/Suncom 291.0781
Internet address: http://www.dca.state.fl.us

CRITICAL STATE CONCERN FIELD OFFICE
2796 Overseas Highway, Suite 212
Marathon, Florida 33050-2227
(305) 289-2402

COMMUNITY PLANNING
2555 Shumard Oak Boulevard
Tallahassee, FL 32399-2100
(850) 488-2356

EMERGENCY MANAGEMENT
2575 Shumard Oak Boulevard
Tallahassee, FL 32399-2100
(850) 413-9969

HOUSING & COMMUNITY DEVELOPMENT
2555 Shumard Oak Boulevard
Tallahassee, FL 32399-2100
(850) 488-7956

RESPONSES TO COMMENTS
Comment No. 16: Florida State Clearinghouse, Emergency Management (Unknown)

Response to Comment 16A:
Response acknowledged.